STATE OF OHIO
DEPARTMENT OF TRANSPORTATION
CHP-36-14.23
CITY OF URBANA
CHAMPAIGN COUNTY

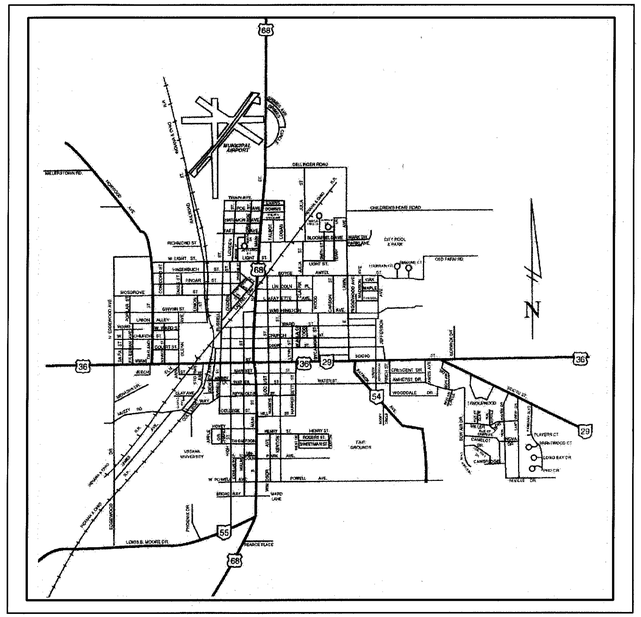

LOCATION MAP

LATITUDE 39?28'15" LONGITUDE 84?20'15"

0 1/4 1/2" 3/4" 1

SCALE IN MILES

N

PORTION TO BE IMPROVED
STATE & FEDERAL ROUTES
OTHER ROADS
COUNTY LINE

DESIGN DESIGNATION

	US68 / US 36
CURRENT ADT (2000)	17110
DESIGN YEAR ADT (2020)	21130
DESIGN HOURLY VOLUME (2020)	1902
DIRECTIONAL DISTRIBUTION	0.55
TRUCKS (24 HOUR B&C)	0.05
DESIGN SPEED	35 MPH (US68)
LEGAL SPEED	35 MPH (US68)
FUNCTIONAL CLASSIFICATION	▪ ARTERIAL (URBAN)

DESIGN EXCEPTIONS

NONE

UNDERGROUND UTILITIES
TWO WORKING DAYS
BEFORE YOU DIG
CALL 1-800-362-2764 (TOLL FREE)
OHIO UTILITIES PROTECTION SERVICE
NON-MEMBERS
MUST BE CALLED DIRECTLY

Prepared By:
Dodson – Stilson, Inc.
A DLZ Company
Engineers–Architects–Scientists
211 South Main Street
Dayton, Ohio 45402

INDEX OF SHEETS

TITLE SHEET.....1
GENERAL NOTES.....2–6
GENERAL SUMMARY.....7–8
LEGEND AND MISCELLANEOUS DETAILS.....9
TRAFFIC SIGNAL INTERCONNECT PLANS.....10–15
TRAFFIC SIGNAL PLANS.....16–50

PROJECT DESCRIPTION

THIS PROJECT CONSISTS OF REPLACEMENT OF 20 TRAFFIC SIGNALS ALONG US 36 AND US 68 IN THE CITY OF URBANA. REPLACEMENT OF ALL TRAFFIC SIGNALS AND EQUIPMENT AT THESE LOCATIONS.

1997 SPECIFICATIONS

THE STANDARD SPECIFICATIONS OF THE STATE OF OHIO, DEPARTMENT OF TRANSPORTATION, INCLUDING CHANGES AND SUPPLEMENTAL SPECIFICATIONS LISTED IN THE PROPOSAL SHALL GOVERN THIS IMPROVEMENT.

I HEREBY APPROVE THESE PLANS AND DECLARE THAT THE MAKING OF THIS IMPROVEMENT WILL NOT REQUIRE THE CLOSING TO TRAFFIC OF THE HIGHWAY AND THAT PROVISIONS FOR THE MAINTENANCE AND SAFETY OF TRAFFIC WILL BE AS SET FORTH ON THE PLANS AND ESTIMATES.

APPROVED William L. Harrison per ltr
DATE 11-24-99 **DISTRICT DEPUTY DIRECTOR**

APPROVED Gordon Proctor Jr.
DATE 12-9-99 **DIRECTOR, DEPARTMENT OF TRANSPORTATION**

APPROVED
DATE 11/23/99 **CITY ENGINEER**

ENGINEERING SEAL
FOR ENTIRE PLAN

STATE OF OHIO
MATTHEW MILLER
E-64151
REGISTERED
PROFESSIONAL ENGINEER

SIGNED Matthew Miller
DATE: 11/19/99

STANDARD CONSTRUCTION DRAWINGS

DWG. NO.	DATE	DWG. NO.	DATE	DWG. NO.	DATE	DWG. NO.	DATE
BP-5.1M	10/28/94	TC-41.41M	03/31/94	TC-83.20M	11/24/93	MT-110.20M	03/01/96
BP-7.1M	10/28/94	TC-41.50M	07/01/94	TC-84.20M	11/24/93		
		TC-42.20M	03/31/94	TC-85.10M	11/24/93		
HL-20.11M	03/31/95	TC-52.10M	07/29/94	TC-85.20M	11/24/93		
HL-30.11.M	03/31/95	TC-52.20M	07/29/94				
HM-30.22M	03/31/95	TC-71.10M	09/01/93	MT-35.10M	01/30/95		
		TC-81.10M	12/10/96	MT-35.11M	01/30/95		
TC-21.20M	12/10/96	TC-81.20M	11/24/93	MT-97.10M	04/25/94		
TC-41.20M	07/01/94	TC-82.10M	11/24/93	MT-105.10M	04/25/94		
TC-41.40M	03/31/94	TC-83.10M	11/24/93	MT-105.11M	04/25/94		

SUPPLEMENTAL SPECIFICATIONS

830	10/21/98
842	1/6/99
863	9/9/97
899	1/6/97
905	4/1/98
907	10/21/98
1063	4/16/96

FEDERAL PROJECT NO. TE21-G0001122
PID NO. 20258
CONSTRUCTION PROJECT NO. -
RAILROAD INVOLVEMENT NONE
CHP-36-14.23
1 / 50

P:\98240002\DWG\With Utilities\URBCV01.DWG.dwg – NOV 18, 1999 – 18:29:36

GENERAL NOTES

THE CONTRACTOR SHALL FURNISH AND INSTALL TRAFFIC SIGNAL EQUIPMENT IN CONFORMANCE TO THESE PLANS AND SPECIFICATIONS, THE 1997 STATE OF OHIO DEPARTMENT OF TRANSPORTATION CONSTRUCTION AND MATERIAL SPECIFICATIONS, ALL SUPPLEMENTAL SPECIFICATIONS, AND THE REQUIREMENTS OF THE CITY OF URBANA. THE CONTRACTOR SHALL INSTALL ALL TRAFFIC SIGNAL EQUIPMENT IN CONFORMANCE TO THE OHIO MANUAL OF UNIFORM TRAFFIC CONTROL DEVICES FOR STREETS AND HIGHWAYS, LATEST REVISION, AND IN CONFORMANCE WITH THE OHIO DEPARTMENT OF TRANSPORTATION BUREAU OF DESIGN SERVICE STANDARD CONSTRUCTION DRAWINGS.

STANDARD CONSTRUCTION DRAWINGS

THE METRIC STANDARD DRAWINGS REFERENCED IN THIS PLAN SHALL BE CONVERTED TO ENGLISH UNITS USING THE SI TO ENGLISH CONVERSION FACTORS PROVIDED IN SECTION 109.011 OF THE 1997 CONSTRUCTION AND MATERIALS SPECIFICATIONS. THE APPENDIX OF ASTME380 SHALL BE UTILIZED FOR ANY ADDITIONAL CONVERSION FACTORS REQUIRED. CONVERSIONS SHALL BE APPROPRIATELY PRECISE AND SHALL REFLECT STANDARD INDUSTRY ENGLISH VALUES WHERE SUITABLE.

UTILITIES

LISTED BELOW ARE THE UTILITIES LOCATED WITHIN THE PROJECT CONSTRUCTION LIMITS AND THEIR RESPECTIVE OWNERS:

GAS
COLUMBIA GAS OF OHIO
P.O. BOX 2318
COLUMBUS, OHIO 43272
1-800-344-4077

TELEPHONE
C.T. COMMUNICATIONS
126 SCIOTO STREET
URBANA, OHIO 43078
1-937-653-4000

ELECTRIC
DAYTON POWER AND LIGHT
114 N. MAIN STREET
URBANA, OHIO 43078
1-937-653-5283

SANITARY SEWER & WATER
CITY OF URBANA
205 S. MAIN STREET
URBANA, OHIO 43078
1-937-652-4334

THE LOCATIONS OF UNDERGROUND UTILITIES SHOWN ON THE PLANS ARE AS OBTAINED FROM THE OWNERS, AS REQUIRED BY SECTION 153.64 O.R.C. THE LOCATIONS ARE INTENDED ONLY AS A GUIDE AND CANNOT BE GUARANTEED ACCURATE. THE CONTRACTOR SHALL BE RESPONSIBLE FOR VERIFYING THE LOCATION OF ALL UTILITIES.

GUARANTEE

THE CONTRACTOR SHALL GUARANTEE THAT THE TRAFFIC CONTROL SYSTEM INSTALLED AS PART OF THE CONTRACT SHALL OPERATE SATISFACTORILY FOR A PERIOD OF ONE HUNDRED AND EIGHTY (180) DAYS FOLLOWING COMPLETION OF THE TEN DAY PERFORMANCE TEST. IN THE EVENT OF UNSATISFACTORY OPERATION, THE CONTRACTOR SHALL CORRECT FAULTY INSTALLATIONS, MAKE REPAIRS AND REPLACE DEFECTIVE PARTS WITH NEW PARTS OF EQUAL OR BETTER QUALITY. MATERIAL AND LABOR COSTS INCURRED IN CORRECTING UNSATISFACTORY OPERATION SHALL BE BORNE BY THE CONTRACTOR. THE GUARANTEE SHALL COVER THE UNITS, MONITORS AND ASSOCIATED EQUIPMENT.

THE COST OF GUARANTEEING THE TRAFFIC CONTROL SYSTEM WILL BE INCIDENTAL TO AND INCLUDED IN THE CONTRACT UNIT PRICE OF THE VARIOUS ITEMS MAKING UP THE SYSTEM.

SIGNAL CONSTRUCTION PERSONNEL REQUIREMENTS

A. THE CONTRACTOR SHALL ASSIGN A SUPERVISOR FOR THIS PROJECT. THE SUPERVISOR SHALL BE A FULL TIME EMPLOYEE OF THE CONTRACTOR. THE CONTRACTOR SHALL NOT CHANGE A SUPERVISOR ASSIGNED TO A PROJECT WITHOUT PRIOR WRITTEN NOTICE. ALL CONTROLLER WORK AS DEFINED BELOW IN ITEMS 1 THRU 4 SHALL BE PERFORMED BY AN IMSA LEVEL TWO CERTIFIED TRAFFIC SIGNAL TECHNICIAN

1. BACK PANEL WIRING TERMINATIONS
2. PROGRAMMING
3. TURN ON
4. TROUBLESHOOTING

B. THE CONTRACTOR SHALL HAVE A FOREMAN ASSIGNED TO EACH CREW PERFORMING WORK FOR THIS PROJECT. A FOREMAN SHALL BE PRESENT AT ALL TIMES WHEN WORK IS PERFORMED BY THE CREW. EACH FOREMAN SHALL BE AN IMSA LEVEL ONE CERTIFIED TECHNICIAN. THE CONTRACTOR SHALL PROVIDE PRIOR VERBAL NOTICE TO THE ENGINEER IN ORDER TO REPLACE A CREW FOREMAN.

C. CRAFTS PEOPLE PERFORMING WORK AS DEFINED BELOW IN ITEMS 1 THRU 7 SHALL BE A CERTIFIED IMSA LEVEL ONE TRAFFIC SIGNAL TECHNICIAN.

1. CABLE SPLICES
2. SIGNAL HEAD INSTALLATION
3. CABLE AND WIRE INSTALLATION
4. POWER SERVICE INSTALLATION
5. GROUND ROD TESTING
6. CABLE INSULATION TESTING
7. FIELD WIRING TERMINATIONS

D. THE CONTRACTOR SHALL PRESENT TO THE ENGINEER PRIOR TO THE COMMENCEMENT OF WORK, THE IMSA LEVEL ONE AND TWO CERTIFICATION PAPERS FOR ALL SIGNAL TECHNICIANS WORKING ON THIS PROJECT.

UNDERDRAINS FOR PULLBOXES

REFERENCE IS MADE TO STANDARD CONSTRUCTION DRAWING HL-30.11 FOR DETAILS OF DRAINING PULLBOXES. UNDERDRAINS FOR PULLBOXES SHALL BE USED AS DIRECTED BY THE ENGINEER AND SHALL BE PROVIDED WHERE THE LENGTH REQUIRED FOR A SATISFACTORY OUTLET DOES NOT EXCEED APPROXIMATELY 20 FEET. AN ESTIMATE QUANTITY OF 50 LIN. FT. OF ITEM 605 4" CONDUIT, TYPE E, IS INCLUDED IN THE GENERAL SUMMARY FOR THIS PURPOSE.

DEPARTMENT OF INDUSTRIAL RELATIONS INSPECTION

A. THE CONTRACTOR SHALL APPLY FOR THE INDUSTRIAL RELATIONS INSPECTION(S), PAY THE APPROPRIATE FEE(S) TO THE INDUSTRIAL RELATIONS DEPARTMENT, AND ADVISE THE DISTRICT TRAFFIC ENGINEER OF THE TIME OF THE INSPECTION(S), SO THAT HE MAY HAVE A REPRESENTATIVE IN ATTENDANCE. IT IS TO BE NOTED THAT THE INDUSTRIAL RELATIONS INSPECTION IS NOT A SUBSTITUTE FOR ODOT'S INSPECTION, NOR DOES IT SUPERSEDE REQUIREMENTS OF THE PLANS AND SPECIFICATIONS.

B. THE COST OF THE INDUSTRIAL RELATIONS INSPECTION SHALL BE CONSIDERED AS INCIDENTAL TO AND INCLUDED IN THE CONTRACT UNIT PRICE OF THE VARIOUS ITEMS MAKING UP THE TRAFFIC CONTROL DEVICES.

ITEM 614 MAINTENANCE OF TRAFFIC

A. A MINIMUM OF ONE LANE IN EACH DIRECTION OF TRAVEL SHALL BE MAINTAINED AT ALL TIMES ON THE MAJOR STREET BY USE OF THE EXISTING PAVEMENT. THE LENGTH AND DURATION OF ALL LANE CLOSURES AND RESTRICTIONS SHALL BE AT THE DISCRETION OF THE ENGINEER.

B. TRENCHING IN STREETS AND SIDEWALKS SHALL NOT BE LEFT OPEN DURING OFF-WORKING HOURS. THE TRENCHES SHALL BE EITHER BACKFILLED WITH CRUSHED STONE OR STEEL PLATED AS DIRECTED BY THE ENGINEER.

C. ALL WORK AND TRAFFIC CONTROL DEVICES SHALL BE IN ACCORDANCE WITH 614 AND OTHER APPLICABLE PORTIONS OF THE SPECIFICATIONS, AS WELL AS THE ODOT STANDARD DRAWINGS LISTED IN THE PLANS AND THE OHIO MANUAL OF UNIFORM TRAFFIC CONTROL DEVICES. THE CONTRACTOR SHALL BE RESPONSIBLE FOR PROVIDING, MAINTAINING AND REMOVING ALL TRAFFIC CONTROL DEVICES IN COMPLIANCE WITH THESE REFERENCES OR AS DIRECTED BY THE ENGINEER.

D. THE CONTRACTOR SHALL PURSUE THE PROJECT IN SUCH A MANNER AS TO MINIMIZE BOTH THE EXTENT AND DURATION OF THE DISRUPTION OF TRAFFIC.

E. INCIDENTAL TO THE REQUIREMENTS OF MAINTAINING TRAFFIC IN ACCORDANCE WITH 614.03, THE CONTRACTOR SHALL BE RESPONSIBLE FOR MAINTAINING TRAFFIC SIGNAL INSTALLATIONS WITHIN THE PROJECT UNDER THE FOLLOWING CONDITIONS:

1. THE CONTRACTOR SHALL BE RESPONSIBLE FOR THE ENTIRE INSTALLATION AT AN INTERSECTION FROM THE TIME HIS OPERATION FIRST DISTURBS THE INSTALLATION UNTIL THE WORK IS ACCEPTED. THE EXISTING TRAFFIC SIGNAL SHALL BE TEMPORARILY MAINTAINED UNTIL THE NEW TRAFFIC SIGNAL INSTALLATION IS IN OPERATION, UNLESS OTHERWISE NOTED.

2. THE CONTRACTOR SHALL BE RESPONSIBLE FOR MAINTENANCE OF NEW SIGNAL INSTALLATIONS OR DEVICES INSTALLED BY THE CONTRACTOR FROM THE TIME OF INSTALLATION UNTIL THE WORK IS ACCEPTED, INCLUDING THE 10 DAY PERFORMANCE TEST.

3. THE CONTRACTOR SHALL CORRECT AS QUICKLY AS POSSIBLE ALL OUTAGES OR MALFUNCTIONS. HE SHALL PROVIDE THE CITY AND THE PROJECT ENGINEER SUCH ADDRESSES AND PHONE NUMBERS WHERE HIS MAINTENANCE FORCES CAN BE CONTACTED. THE CONTRACTOR SHALL PROVIDE ONE OR MORE PERSONS TO RECEIVE ALL CALLS AND DISPATCH THE NECESSARY MAINTENANCE FORCES TO CORRECT MALFUNCTIONS AND OUTAGES. SUCH A PERSON OR PERSONS MAY BE USED TO PERFORM OTHER DUTIES AS LONG AS PROMPT ATTENTION IS GIVEN TO THESE CALLS AND A PERSON IS READILY AVAILABLE CONTINUOUSLY 24 HOURS A DAY, SEVEN DAYS A WEEK. ALL LAMP OUTAGES, CABLE OUTAGES, ELECTRICAL FAILURES, EQUIPMENT MALFUNCTIONS AND MISALIGNED SIGNAL HEADS SHALL BE CORRECTED TO THE SATISFACTION OF THE ENGINEER, WITH THE SIGNAL RESTORED TO SERVICE WITHIN FOUR HOURS AFTER THE CONTRACTOR HAS BEEN NOTIFIED OF THE OUTAGE.

4. IN THE EVENT NEW SIGNAL EQUIPMENT IS DAMAGED PRIOR TO ACCEPTANCE, ALL DAMAGED EQUIPMENT SHALL BE REPLACED BY THE CONTRACTOR TO THE SATISFACTION OF THE ENGINEER, WITH THE SIGNAL RESTORED TO SERVICE WITHIN 8 HOURS AFTER THE CONTRACTOR'S NOTIFICATION OF THE OUTAGE.

5. IF POLES AND/ OR CONTROL EQUIPMENT ARE DAMAGED AND MUST BE REPLACED, THE CONTRACTOR SHALL MAKE TEMPORARY REPAIRS AS NECESSARY TO BRING THE SIGNAL BACK INTO FULL OPERATION WITHIN THE ALLOWED 8 HOUR PERIOD, AND SHALL MAKE PERMANENT REPAIRS OR REPLACEMENT AS SOON THEREAFTER AS POSSIBLE.

6. NONE OF THE ABOVE SHALL BE CONSTRUED AS COLLECTIVE OR CONSECUTIVE OUTAGE TIME PERIODS AT ANY ONE LOCATION. THAT IS, WHERE MORE THAN ONE OUTAGE OCCURS AT ANY ONE LOCATION, THEN THE ALLOTTED TIME LIMIT SHALL BE FOR THE WORST SINGLE OUTAGE.

7. WHERE OUTAGES ARE THE DIRECT RESULT OF A VEHICLE ACCIDENT, THE RESPONSE OF THE CONTRACTOR SHALL BE AS OUTLINED ABOVE. THE CONTRACTOR SHALL BE RESPONSIBLE FOR COLLECTION OF ANY COMPENSATION FOR THIS WORK FROM THOSE PARTIES RESPONSIBLE FOR THE DAMAGE.

8. WHERE THE CONTRACTOR HAS FAILED TO OR CANNOT RESPOND TO AN OUTAGE OR SIGNAL EQUIPMENT MALFUNCTION AT THESE LOCATIONS WITHIN HIS RESPONSIBILITY WITHIN PERIODS AS SPECIFIED ABOVE, THE ENGINEER MAY INVOKE THE PROVISIONS OF SECTION 105.15, AND ANY SUBSEQUENT BILLINGS TO THE CITY OF URBANA FOR POLICE SERVICES AND MAINTENANCE SERVICES BY STATE OR CITY FORCES SHALL BE DEDUCTED FROM MONIES DUE OR TO BECOME DUE THE CONTRACTOR IN ACCORDANCE WITH PROVISIONS OF SECTION 105.15.

9. WHEN A TRAFFIC SIGNAL MUST BE TAKEN OUT OF SERVICE BY THE CONTRACTOR, DUE TO CONSTRUCTION PROCEDURES, THIS OUTAGE SHALL NOT EXCEED 7 HOURS AND SHALL NOT INCLUDE THE HOURS OF 7:00 AM TO 9:00 AM OR 4:00 PM TO 6:00 PM. ANY SIGNALIZED INTERSECTION WHERE THE SIGNAL IS OUT OF SERVICE DUE TO CONSTRUCTION PROCEDURES OR DUE TO ANY OUTAGE OR MALFUNCTION OF EQUIPMENT AS DESCRIBED ABOVE SHALL BE PROTECTED BY AN OFF DUTY UNIFORMED LAW ENFORCEMENT OFFICER. THE CONTRACTOR SHALL ARRANGE FOR SUCH SERVICES WITH THE CITY OF URBANA POLICE DEPARTMENT. THE CONTRACTOR SHALL HIRE THESE OFFICERS AND SHALL BE RESPONSIBLE FOR THEIR ACTIONS.

F. ALL COSTS RESULTING FROM THE ABOVE REQUIREMENTS SHALL BE CONSIDERED TO BE INCLUDED IN THE LUMP SUM PRICE FOR ITEM 614 MAINTAINING TRAFFIC.

ITEM 625 TRENCH IN PAVED AREA, TYPE "A", AS PER PLAN

A. ALL TRENCH IN SIDEWALK SHALL BE DESIGNATED AS TRENCH IN PAVED AREA, TYPE "A", AS PER PLAN. THIS PAY ITEM WILL INVOLVE REMOVAL OF THE SIDEWALK AREA AND RESTORATION AS DESCRIBED BELOW.

1. ALL CONCRETE SIDEWALK REMOVED SHALL BE REMOVED IN COMPLETE PANELS TO AN EXISTING JOINT, LEAVING A CLEAN EDGE. NO REMOVAL OF PARTIAL PANELS SHALL BE PERMITTED.
2. CONCRETE WALK SHALL BE RESTORED IN COMPLETE PANELS.
3. JOINTS SHALL BE PLACED TO ALIGN WITH ADJACENT JOINTS, AND IN PATTERNS AS EXISTED PRIOR TO WALK REMOVAL.
4. FINISHES FOR SIDEWALKS SHALL CLOSELY MATCH THE FINISHES ON EXISTING ADJACENT WALKS. ALL JOINTS SHALL BE HAND TOOLED. EDGES SHALL BE FINISHED AFTER PANEL INTERIOR TEXTURE HAS BEEN APPLIED.
5. ALL AREAS OF BRICK PAVERS THAT ARE AFFECTED BY TRENCHING SHALL BE COMPLETELY REMOVED AND DISPOSED OF BY THE CONTRACTOR. REPLACEMENT BRICK PAVERS FOR THESE AREAS WILL BE FURNISHED BY THE CITY OF URBANA AND SHALL BE INSTALLED BY THE CONTRACTOR AS PER THE MANUFACTURER'S REQUIREMENTS AND SPECIFICATIONS.

B. ALL TRENCHES IN SIDEWALKS BETWEEN INTERSECTIONS AND WITHIN MONUMENT SQUARE SHALL BE BETWEEN 2 1/2 AND 4 FEET FROM THE BACK OF THE CURB. EXISTING CITY-OWNED CONDUITS CONTAINING TRAFFIC SIGNAL CONDUCTOR CABLE, TRAFFIC SIGNAL INTERCONNECT AND STREET LIGHT POWER ARE PRESENT IN THIS AREA ALONG THE ENTIRE LENGTH. UNLESS OTHERWISE APPROVED BY THE CITY AND THE ENGINEER, THE CONTRACTOR SHALL TRENCH SO AS TO PLACE NEW CONDUITS ADJACENT TO THE EXISTING CONDUITS WITHOUT DISTURBING THE EXISTING CONDUITS.

C. WHERE STREET TREES ARE PRESENT IN AN AREA TO BE TRENCHED, THE CONTRACTOR SHALL CONTACT THE CITY 2 WEEKS IN ADVANCE FOR REMOVAL OF THESE TREES BY CITY FORCES AND AT CITY EXPENSE.

D. AT LOCATIONS DESIGNATED BY THE PLANS, NEW OR REPLACEMENT STREET LIGHTS ARE TO BE INSTALLED IN THE SIDEWALK BY DAYTON POWER AND LIGHT. THE CONTRACTOR

CALCULATED: 1 : 1
CHECKED: 1 : 1

GENERAL NOTES

CHP-36-14.23
PID NO. 20258

P:\98240002\DWG\9802GEN1.DWG.dwg - NOV 18, 1999 - 15:06:29

SHALL CONTACT DP&L 2 WEEKS IN ADVANCE OF TRENCHING IN THESE AREAS. THE CONTRACTOR SHALL COORDINATE WITH DP&L TO DETERMINE THE EXACT LOCATION OF PROPOSED STREET LIGHTS AND ALLOW DP&L TO INSTALL CONDUIT SWEEPS AND FOUNDATIONS PRIOR TO SIDEWALK RESTORATION.

E. ALL COSTS TO THE CONTRACTOR RESULTING FROM THE ABOVE REQUIREMENTS SHALL BE INCLUDED IN PAYMENT FOR ITEM 625 TRENCH IN PAVED AREA, TYPE "A", AS PER PLAN.

ITEM 632 DETECTOR LOOP, AS PER PLAN

FOR THE 3 DETECTOR LOOPS THAT HAVE BEEN DESIGNATED IN THE PLANS AS PREFORMED, THE CONTRACTOR SHALL INSTALL COMMERCIALLY AVAILABLE PREFORMED LOOP DETECTORS IN THE DESIGNATED CONFIGURATIONS AND MEETING OR EXCEEDING THE FOLLOWING SPECIFICATIONS:

LOOPS SHALL BE CONSTRUCTED OF 3/8" O. D. HYDRAULIC FLEX HOSE. HEADS AND TAILS SHALL BE COMPLETELY FILLED WITH RUBBERIZED ASPHALT. TEES AT JUNCTION OF HEAD/TAIL SHALL BE SCHEDULE 80 CPVC. LEAD-INS SHALL BE TWISTED 3 TIMES PER FOOT MINIMUM. LOOP SHALL HAVE ONE CONTINUOUS WIRE THROUGH THE LOOP HEAD AND LEAD-IN. WIRE SHALL BE 20 GAUGE, STRANDED, TEFLON-COATED, SINGLE CONDUCTOR (MILITARY SPEC. MIL-W-16878/4 TYPE E). ALL LOOPS SHALL BE INSTALLED AND TESTED PER SECTION 632.

PAYMENT FOR INSTALLATION OF PREFORMED LOOPS AT THE DESIGNATED LOCATIONS SHALL BE MADE AT THE CONTRACT UNIT BID PRICE PER EACH OF ITEM 632 DETECTOR LOOP, AS PER PLAN. THIS PAYMENT WILL BE FULL COMPENSATION FOR ALL LABOR, MATERIALS, TOOLS, EQUIPMENT, AND OTHER INCIDENTALS NECESSARY FOR EACH DETECTOR LOOP FURNISHED, IN PLACE, COMPLETE AND ACCEPTED

ITEM 632 DETECTOR LOOP AND ITEM 632 DETECTOR LOOP, AS PER PLAN

UNLESS OTHERWISE SPECIFIED IN THE PLANS OR OTHERWISE DIRECTED BY THE ENGINEER, THE LEADING EDGE OF ALL DETECTOR LOOPS SHALL BE PLACED 2 FEET FORWARD OF THE STOP LINE

ITEM 632 INTERCONNECT CABLE, INTEGRAL MESSENGER WIRE TYPE, 6 PAIR, NO. 19 AWG, SOLID, REA (PE-38), AS PER PLAN

A. THE INTEGRAL MESSENGER TYPE INTERCONNECT CABLE SHALL MEET THE REQUIREMENTS OF 732.19. THE INTEGRAL MESSENGER SUPPORT IS TO BE REMOVED WHERE THE INTERCONNECT CABLE IS TO RUN INSIDE POLES, CABINETS OR CONDUIT. THE MESSENGER AND JACKET WEB ARE TO BE NEATLY REMOVED BY THE USE OF A TOOL SPECIFICALLY DESIGNED AND SIZED FOR THIS PURPOSE SUCH THAT THERE IS NO DAMAGE TO THE JACKET AND SHIELD OF THE CABLE.

B. THE INTERCONNECT PLAN SHEETS SHOW THE PROPOSED CABLE TYPES AND LOCATION FOR THE PROJECT. THE CONTRACTOR SHALL REMOVE ANY EXISTING INTERCONNECT CABLE AND SPLICE BOXES WHERE PROPOSED INTERCONNECT IS TO FOLLOW THE PATH OF EXISTING INTERCONNECT.

C. INTERCONNECT CABLE SHALL BE MOUNTED SO AS TO PROVIDED A MINIMUM CLEARANCE OF 19 FEET ABOVE ALL PUBLIC STREETS AND 15 FEET ABOVE ALL OTHER LOCATIONS. CLEARANCE FROM NEUTRAL POWER CABLE SHALL BE AT LEAST 40 INCHES AT POLES AND 30 INCHES MIDSPAN. CLEARANCE SHALL BE AT LEAST 18 INCHES FROM CABLE TELEVISION AND 12 INCHES FROM OTHER COMMUNICATION CABLE. THE CONTRACTOR SHALL BE RESPONSIBLE FOR COORDINATION WITH ALL UTILITIES TO DETERMINE THE ACTUAL INTERCONNECT MOUNTING HEIGHTS THROUGHOUT THE PROJECT.

D. WHERE SPLICE ENCLOSURES ARE DESIGNATED ON THE PLANS, THE CONTRACTOR SHALL PROVIDE A WEATHERTIGHT AERIAL SPLICE ENCLOSURES. THE COST OF SPLICE ENCLOSURES SHALL BE INCIDENTAL TO THE UNIT BID PRICE FOR ITEM 632 INTERCONNECT CABLE, INTEGRAL MESSENGER WIRE TYPE, 6 PAIR, NO. 19 AWG, SOLID, REA (PE-38), AS PER PLAN

E. TESTING SHALL BE AS REQUIRED BY 632.27

ITEM 632 LOOP DETECTOR UNIT, 2 CHANNEL DELAY AND EXTENSION TYPE, AS PER PLAN

LOOP DETECTOR UNITS SHALL CONFORM TO O.D.O.T. SPECIFICATION 732.071 AND THE FOLLOWING REQUIREMENTS:

A. DETECTORS SHALL BE SELF-TUNING AND OPERATIONAL WITHIN (1) ONE SECOND AFTER APPLICATION OF POWER.
B. SHALL HAVE UNLIMITED ENVIRONMENT TRACKING THROUGHOUT THE TUNING RANGE AND OPERATE BETWEEN 95-135 VAC 60 HZ AT 4.0 WATTS.
C. SHALL BE ABLE TO ACCEPT A LOOP INDUCTANCE FROM 30-1,000 MICROHENRIES WITH A Q FACTOR OF 5 OR GREATER.
D. THE LOOP INPUT SHALL BE TRANSFORMER ISOLATED.
E. SHALL HAVE (3) THREE SELECTABLE FREQUENCY RANGES VIA FRONT PANEL.
F. SHALL HAVE (3) THREE SELECTABLE SENSITIVITY SETTINGS VIA FRONT PANEL.
G. SHALL HAVE (2) TWO SELECTABLE MODE SETTINGS VIA FRONT PANEL AS FOLLOWS:

1. LONG PRESENCE MODE - MUST PROVIDE CONTINUOUS LOOP TRACKING WITH A 8-15 MINUTES MAXIMUM HOLD TIME.
2. MEDIUM PRESENCE MODE - MUST PROVIDE CONTINUOUS LOOP TRACKING WITH 4-10 MINUTES MAXIMUM HOLD TIME.
3. PULSE MODE - MUST BE ABLE TO TURN OUT A VEHICLE LEFT AFTER A (2) TWO SECOND PERIOD SO AS TO BE ABLE TO DETECT ANY OTHER VEHICLE ON THE REMAINDER OF THE LOOP. THE LOOP ZONE MUST BE AT FULL SENSITIVITY WITHIN 100 MILLISECONDS.

H. SHALL BE ABLE TO TOLERATE, WITHOUT DAMAGE, 1,000 VOLTS DISCHARGED DIRECTLY ACROSS LOOP INPUT TERMINALS FROM A (10) TEN MICROFARAD CAPACITOR.
I. OUTPUT CIRCUIT MUST BE RELAY OUTPUT OPERATION.
J. IF LOOP LEAD-IN NETWORK EXCEEDS INDUCTANCE RANGE, OR IF A TOTAL LOOP FAILURE OCCURS, A CONTINUOS OUTPUT IN ALL MODES SHALL BE GENERATED AND CANNOT BE REMOVED UNLESS POWER IS REMOVED.
K. A CALL EXTENSION TIME ADJUSTABLE FROM ZERO TO SEVEN AND ONE-HALF (7.5) SECONDS IN 0.5 SECOND INCREMENTS ALONG WITH A CALL DELAY TIME ADJUSTABLE FROM 1 TO 31 IN ONE (1) SECOND INCREMENTS SHALL BE REQUIRED.
L. ALL DIGITAL LOGIC WITH EXCEPTION OF THE CLOCK GENERATED CIRCUIT SHALL BE CONTAINED IN A SINGLE INTEGRATED CIRCUIT.
M. THE INDICATOR ON FRONT PANEL SHALL BE OUT OF A HIGH INTENSITY TYPE LED (LIGHT EMITTING DIODE).

ITEM 632 SIGNAL SUPPORT TYPE TC-81.20M, DESIGN BY SIZE, AS PER PLAN & ITEM 632 COMBINATION SIGNAL SUPPORT, TYPE TC-81.20M, DESIGN BY SIZE, AS PER PLAN

A. ANCHOR BASE FOUNDATIONS SHALL BE SET BEFORE MAST ARM POLES ARE ORDERED. IN THE EVENT THAT FOUNDATIONS CANNOT BE SET IN THE DESIGNATED SPOT (AS PLANNED) THEN THE CONTRACTOR SHALL MAKE APPROPRIATE ADJUSTMENTS TO THE POLE MANUFACTURING DATA AS SHOWN IN THE PLANS. ALL MODIFICATIONS TO THE POLE DESIGNS MUST BE APPROVED BY THE ENGINEER, IN WRITING, PRIOR TO PLACING THE ORDER.

B. THE CONTRACTOR SHALL CONTACT DAYTON POWER AND LIGHT TO COORDINATE THE TRANSFER OF LUMINAIRES TO COMBINATION POLES.

C. SIGNAL SUPPORTS AND LUMINAIRE ARMS SHALL BE PAINTED BLACK, IN ACCORDANCE WITH THE FOLLOWING SPECIFICATION (OR APPROVED EQUAL):

THE SUPPORTS SHALL HAVE THE INTERIOR AIR SPRAYED WITH A RUST INHIBITIVE WAX BASE COATING. THE OUTSIDE SHALL BE SANDBLASTED TO SSPC-SP6 COMMERCIAL BLAST CLEANING AND PRIMED WITH A HIGH-BUILD PRIMER AT 3 TO 4 MILS DRY FILM. THE OUTSIDE SHALL HAVE A FINISH COAT OF POLANE POLYURETHANE ENAMEL 1 TO 2 MILS DRY FILM. COLOR TO BE FEDERAL BLACK, COLOR NUMBER 17038.

D. PEDESTRIAN HEADS AND AUXILLIARY SIGNAL HEADS SHALL BE ATTACHED WITH BLIND HALF COUPLINGS PER TC-85.10.

E. PAYMENT WILL BE AT THE CONTRACT UNIT PRICE AND WILL BE FULL COMPENSATION FOR ALL LABOR, MATERIALS, TOOLS, EQUIPMENT, AND OTHER INCIDENTALS NECESSARY FOR EACH SUPPORT FURNISHED, IN PLACE, COMPLETE AND ACCEPTED.

ITEM 632 PEDESTAL, 9', AS PER PLAN

A. THE PEDESTAL AND TRANSFORMER BASE SHALL BE PAINTED BLACK IN ACCORDANCE WITH THE FOLLOWING SPECIFICATION (OR APPROVED EQUAL):

THE SUPPORTS SHALL HAVE THE INTERIOR AIR SPRAYED WITH A RUST INHIBITIVE WAX BASE COATING. THE OUTSIDE SHALL BE SANDBLASTED TO SSPC-SP6 COMMERCIAL BLAST CLEANING AND PRIMED WITH A HI-BUILD PRIMER AT 3 TO 4 MILS DRY FILM. THE OUTSIDE SHALL HAVE A FINISH COAT OF POLANE POLYURETHANE ENAMEL 1 TO 2 MILS DRY FILM. COLOR TO BE FEDERAL BLACK, COLOR NUMBER 17038.

B. PAYMENT WILL BE AT THE CONTRACT UNIT PRICE AND WILL BE FULL COMPENSATION FOR ALL LABOR, MATERIALS, TOOLS, EQUIPMENT, AND OTHER INCIDENTALS NECESSARY FOR EACH PEDESTAL FURNISHED, IN PLACE, COMPLETED AND ACCEPTED.

ITEM 632, COMBINATION STRAIN POLE, TYPE TC-81.10, DESIGN 3, AS PER PLAN

A. THE CONTRACTOR SHALL CONTACT DAYTON POWER AND LIGHT TO COORDINATE THE TRANSFER OF LUMINAIRES TO THE COMBINATION STRAIN POLES.

B. THE STRAIN POLES AND LUMINAIRE ARMS SHALL BE PAINTED BLACK IN ACCORDANCE WITH THE FOLLOWING SPECIFICATION (OR APPROVED EQUAL):

THE SUPPORTS SHALL HAVE THE INTERIOR AIR SPRAYED WITH A RUST INHIBITIVE WAX BASE COATING. THE OUTSIDE SHALL BE SANDBLASTED TO SSPC-SP6 COMMERCIAL BLAST CLEANING AND PRIMED WITH A HI-BUILD PRIMER AT 3 TO 4 MILS DRY FILM. THE OUTSIDE SHALL HAVE A FINISH COAT OF POLANE POLYURETHANE ENAMEL 1 TO 2 MILS DRY FILM. COLOR TO BE FEDERAL BLACK, COLOR NUMBER 17038.

C. PAYMENT WILL BE AT THE CONTRACT UNIT PRICE AND WILL BE FULL COMPENSATION FOR ALL LABOR, MATERIALS, TOOLS, EQUIPMENT, AND OTHER INCIDENTALS NECESSARY FOR EACH PEDESTAL FURNISHED, IN PLACE, COMPLETED AND ACCEPTED.

ITEM 632 PEDESTRIAN SIGNAL HEAD, TYPE A-2, AS PER PLAN

PEDESTRIAN SIGNAL HEAD HOUSINGS AND MOUNTING HARDWARE SHALL BE PAINTED BLACK TO MATCH THE COLOR OF THE SIGNAL SUPPORTS. THE "WALK" AND "DONT WALK" LEGEND SHALL UTILIZE THE INTERNATIONAL SYMBOL STANDARD.

ITEM 632 POWER SERVICE, AS PER PLAN

A. ELECTRICAL POWER SHALL BE OBTAINED FROM DAYTON POWER AND LIGHT (DP&L) AT THE LOCATIONS SHOWN ON THE PLANS. THE POWER SUPPLIED SHALL BE 120 VOLT AC. THE METER BASE SHALL BE SUPPLIED BY THE ELECTRIC COMPANY AND INSTALLED BY THE CONTRACTOR. THE CONTRACTOR SHALL CONTACT DP&L AT (513) 599-4910 TO ARRANGE THE POWER SERVICE AT EACH LOCATION.

B. PAYMENT FOR ITEM 632 POWER SERVICE, AS PER PLAN, SHALL BE AS PER 632.29 AND SHALL INCLUDE ALL HARDWARE. ATTACHMENTS, SERVICE FEES, AND OTHER INCIDENTALS NECESSARY TO PROVIDE POWER SERVICE FOR EACH SIGNAL INSTALLATION.

ITEM 632 PHONE DROP, AS PER PLAN

A. THE CONTRACTOR SHALL COORDINATE WITH THE TELEPHONE COMPANY TO INSTALL AND ACTIVATE TELEPHONE SERVICE IN THE CONTROLLER CABINET AT THE INTERSECTION OF SR 29 (SCIOTO ST.) AND JEFFERSON ST. COORDINATION FOR THE INSTALLATION OF SERVICE AND FOR BILLING ARRANGEMENTS WITH THE CITY OF URBANA SHALL BE THE RESPONSIBILITY OF THE CONTRACTOR.

B. PAYMENT WILL BE MADE AT THE CONTRACT UNIT PRICE BID PER EACH OF ITEM 632 PHONE DROP, AS PER PLAN. ANY FEES REQUIRED TO OBTAIN A SERVICABLE INSTALLATION SHALL BE THE RESPONSIBILITY OF THE CONTRACTOR AND SHALL BE INCIDENTAL TO THE COST OF THIS ITEM.

ITEM 632 REMOVAL OF TRAFFIC SIGNAL INSTALLATION, AS PER PLAN

A. EXISTING TRAFFIC SIGNAL INSTALLATIONS, INCLUDING SIGNAL HEADS, CABLE, MESSENGER WIRE, SIGNAL SUPPORTS AND POLES, CONTROLLERS, CABINETS, SUPPORT FOUNDATIONS AND CONTROLLER FOUNDATIONS SHALL BE REMOVED IN ACCORDANCE WITH 632.25. ALL OF THE ABOVE ITEMS SHALL BE REMOVED UNLESS OTHERWISE DESIGNATED IN THE PLANS TO REMAIN. ALL SIGNAL HEADS, SIGNAL SUPPORTS AND POLES, CONTROLLERS AND CABINETS AND OTHER MATERIAL DESIGNATED FOR SALVAGE SHALL BE DELIVERED TO THE CITY OF URBANA MAINTENANCE FACILITY. CONTACT RICHARD MCCAIN, SUPERINTENDENT OF PUBLIC WORKS, (937) 652-4334 FOR INSTRUCTIONS.

B. THE CITY OF URBANA CURRENTLY PLANS TO ABANDON AN EXISTING NETWORK OF OVERHEAD SPEAKERS, SPEAKER WIRE, 220-VOLT POWER CABLE AND OUTLETS IN THE VICINITY OF MONUMENT SQUARE. WIRING AND POWER SERVICE FOR THIS NETWORK IS CURRENTLY ATTACHED TO TRAFFIC SIGNAL POLES FROM THE INTERSECTIONS OF MAIN AND WATER TO MAIN AND CHURCH. THE CONTRACTOR SHALL REMOVE ALL EQUIPMENT, WIRING AND POWER SERVICE FOR THIS NETWORK FROM ANY TRAFFIC SIGNAL ITEM THAT IS DESIGNATED FOR REMOVAL UNDER THIS CONTRACT. WIRING SHALL BE REMOVEDTO THE NEXT SECURE ATTACHMENT POINT, WHERE THE REMAINING INACTIVE WIRING SHALL BE CLAMPED OR TIED AS NECESSARY TO PREVENT IT FROM FALLING. THE CONTRACTOR SHALL DISPOSE OF ALL CABLE AND WIRING REMOVED. OTHER ITEMS SHALL BE SALVAGED AS DIRECTED BY THE CITY. CONTACT RICHARD MCCAIN, SUPERINTENDENT OF PUBLIC WORKS, (937) 652-4334 FOR INSTRUCTIONS.

C. ALL LABOR, EQUIPMENT AND MATERIALS NECESARY TO REMOVE, DISPOSE OF, TERMINATE, SECURE AND PROTECT ALL CITY WIRING AND EQUIPMENT AS DESCRIBED IN THIS SECTION SHALL BE INCIDENTAL TO THE CONTRACT UNIT PRICE FOR ITEM 632 REMOVAL OF TRAFFIC SIGNAL INSTALLATION, AS PER PLAN

ITEM 633 CENTRAL OFFICE MONITOR, AS PER PLAN

THIS ITEM OF WORK SHALL CONSIST OF INSTALLING THE CENTRAL OFFICE MONITOR TO BE LOCATED AT THE CITY OF URBANA MUNICIPAL BUILDING, 205 SOUTH MAIN STREET. THE BASIC CENTRAL EQUIPMENT COMPLEMENT SHALL BE SUPPLIED AND SHALL CONSIST OF THE FOLLOWING:

CALCULATED: : :
CHECKED: : :

GENERAL NOTES

CHP-36-14.23
PID NO. 20258

P:\98240002\DWG\98026EN2.DWG - NOV 18, 1999 - 15:08:41

A. AN IBM COMPATIBLE PERSONAL COMPUTER WITH A MINIMUM OF A 500 MHZ PENTIUM III PROCESSOR, 96 MB USER MEMORY, 1.44 MB INTERNAL 3.5" FLOPPY DISKETTE DRIVE, 4X/4X/20X SPEED INTERNAL CD-RW DRIVE, 13.6 GB HARD DISK DRIVE, 2X AGP GRAPHICS CARD WITH 8 MB RAM, THREE EXPANSION SLOTS, ONE SERIAL PORT, ONE PARALLEL PORT AND DOS VERSION 6.2 OR LATER AND MICROSOFT WINDOWS 98 OR WINDOWS NT 4.0 WITH:

1. LASER PRINTER
2. 17" SVGA COLOR MONITOR
3. A 56 KBPS V.90 EXTERNAL MODEM, CAPABLE OF OPERATING AT 2400 BPS
4. A POWER LINE FILTER, VOLTAGE SURGE PROTECTOR AND A FUSE PROTECTED MULTI-SERVICE OUTLET WITH AT LEAST SIX POSITIONS.
5. ALL NECESSARY CABLES AND ACCESSORIES NEED TO MAKE THE SYSTEM OPERATE ACCORDING TO THESE SPECIFICATIONS.
6. A PHONE DROP SHALL BE PROVIDED BY THE CITY OF URBANA.
7. LATEST VERSION OF THE CLOSED LOOP SYSTEM OPERATING SOFTWARE COMPATIBLE WITH THE TRAFFIC CONTROLLERS INSTALLED FOR THIS PROJECT.
8. MICROSOFT COMPATIBLE SERIAL MOUSE AND PAD.

B. THE GRAPHICS SHALL DISPLAY, IN COLOR, THE VEHICULAR SIGNALS, PEDESTRIAN SIGNALS AND DETECTOR ACTUATIONS. EACH INTERSECTION IN ANY OF THE SUBSYSTEMS SHALL BE CAPABLE OF VIEWING ONE INTERSECTION AT A TIME. THE INTERSECTION LAYOUT SHALL BE GRAPHICALLY CONSTRUCTABLE BY THE USER USING PREDETERMINED SHAPES (EG: "T" INTERSECTION). ALSO IT SHALL BE POSSIBLE TO DISPLAY THE STATUS OF A COMPLETE SUBSYSTEM AT ONE TIME ON THE MONITOR. THE NAME AND SIGNAL STATUS (G-Y-R) OF EACH INTERSECTION SHALL BE DISPLAYED. THE SUBSYSTEM NETWORK SHALL BE CAPABLE OF BEING CONFIGURED IN ANY USER DEFINED GRID.

C. UPON COMMAND FROM THE CENTRAL OFFICE FACILITY, IT SHALL BE POSSIBLE TO DOWNLOAD ALL STORED SETTINGS ON THE DATA DISK FOR INTERSECTION CONTROLLER TIMING AS WELL AS COORDINATION SETTINGS AND TIME OF DAY PLANS. IT SHALL BE POSSIBLE TO DOWNLOAD ALL SETTINGS TO ALL INTERSECTIONS IN A SUBSYSTEM OR SELECTED ANY/ALL PARAMETERS TO ANY INDIVIDUAL INTERSECTION. ALSO, UPON COMMAND IT SHALL BE POSSIBLE TO UPLOAD ALL THE INFORMATION MENTIONED ABOVE FROM EACH LOCAL INTERSECTION TO THE CENTRAL FACILITY.

IT SHALL ALSO BE POSSIBLE TO DOWNLOAD/UPLOAD ALL ON-STREET MASTER SETTING BETWEEN THE CENTRAL AND ON-STREET MASTER.

UPON COMMAND FROM THE ON-STREET MASTER IT SHALL BE POSSIBLE TO DOWNLOAD ALL MASTER SETTINGS FROM THE CENTRAL. THIS DOWNLOAD SHALL BE POSSIBLE EVEN WHEN THE CENTRAL IS UNATTENDED.

IT SHALL BE POSSIBLE TO COMPARE AN UPLOADED LOCAL INTERSECTION DATA BASE WITH A PREVIOUSLY DEVELOPED DATA BASE STORED IN THE CENTRAL OFFICE MONITOR'S MEMORY. DIFFERENCES IN THE DATA BASES SHALL BE REPORTED.

D. ON-STREET MASTER SHALL ATTEMPT TO CONTACT THE CENTRAL OFFICE WHENEVER A SYSTEM MONITORED CONDITION OCCURS WHICH IS PROGRAMMED FOR IMMEDIATE REPORT. IF THE ON-STREET MASTER PROGRAM IS ON LINE IN THE CENTRAL OFFICE MONITOR, THE FAILURE REPORT WILL BE DISPLAYED ON THE CRT AND ALSO HARD-COPIED BY THE PRINTER. THE ON-STREET MASTER WILL CONTINUE TO CONTACT THE CENTRAL OFFICE MONITOR AT REGULAR INTERVALS UNTIL THE PROGRAM IS BROUGHT ON LINE AND THE MESSAGE IS TRANSMITTED.

E. UPON COMMAND FROM THE CENTRAL OFFICE FACILITY IT SHALL BE POSSIBLE TO DOWNLOAD MANUAL COMMANDS THAT WILL AFFECT THE FOLLOWING:

1. OVERRIDE PATTERN SELECTED BY MASTER
2. PLACE ENTIRE SYSTEM IN FREE OR FLASH
3. PLACE AN INTERSECTION IN FREE
4. PLACE AN INTERSECTION IN FLASH
5. PLACE SYSTEM IN TIME-OF-DAY MODE

F. UPON COMMAND FROM THE CENTRAL OFFICE FACILITY IT SHALL BE POSSIBLE TO RETRIEVE THE FOLLOWING LOG REPORTS:

1. PATTERN CHANGES
2. LOCAL INTERSECTION FAILURES
3. SENSOR FAILURE
4. VOLUME, OCCUPANCY, AND SPEED

G. IT SHALL BE POSSIBLE TO SPECIFY THE TIME AND DATE FOR AUTOMATIC TRANSMISSION OF ANY COMBINATION ON ALL THE LOGS SPECIFIED IN PARAGRAPH F.

H. THE CONTRACTOR SHALL SUPPLY TRAINING FOR CITY DESIGNATED PERSONNEL. THE TRAINING SHALL INCLUDE OPERATION OF THE CENTRAL COMPUTER AND FIELD EQUIPMENT, MAINTENANCE OF ALL FIELD EQUIPMENT AND ASSISTANCE IN SYSTEM PARAMETER DEVELOPMENT. THE TRAINING SHALL BE AS FOLLOWS:

1. LOCAL CONTROL EQUIPMENT CONSTRUCTION TRAINING SHALL CONSIST OF AT LEAST FOUR (4) HOURS OF INSTRUCTION FOR UP TO FIVE PERSONS. TRAINING SESSIONS WILL BE HELD IN CITY PROVIDED FACILITIES. TRAINING WILL INCLUDE THOROUGH FAMILIARIZATION WITH THE FOLLOWING FIELD EQUIPMENT:

a. LOCAL CONTROLLERS
b. INTERSECTION MULTIPLEX AND TELEMETRY AND MODEM UNITS
c. CONTROL ACCESSORIES AND AUXILIARY EQUIPMENT

THE COURSES SHALL COVER GENERAL FIELD MAINTENANCE AND TROUBLESHOOTING PROCEDURES AND TESTING PROCEDURES.

2. TRAFFIC RESPONSIVE MASTER CONTROLLER TRAINING SHALL CONSIST OF AT LEAST TWO (2) HOURS OF INSTRUCTION FOR UP TO FIVE CITY DESIGNATED PERSONS. TRAINING SESSIONS SHALL BE HELD AT THE SYSTEM SUPPLIER'S FACILITIES AND SHALL BE HELD IN CONJUNCTION WITH THE BENCHMARK TEST.

3. CENTRAL SOFTWARE TRAINING SHALL INCLUDE ALL ITEMS NECESSARY TO SET UP THE MONITORING OF INTERSECTION CONTROLLERS. THERE SHALL BE FOUR (4) HOURS OF TRAINING FOR UP TO FIVE PERSONS. IT SHALL INCLUDE GENERAL MAINTENANCE AND TROUBLE SHOOTING PROCEDURES.

4. MAINTENANCE TRAINING (COMPUTER AND PERIPHERALS) SHALL CONSIST OF AT LEAST FOUR (4) HOURS OF INSTRUCTION AT A SITE SELECTED BY THE SYSTEM SUPPLIER FOR UP TO FIVE CITY DESIGNATED PERSONS. IT SHALL COVER DETAILED PROCEDURES FOR MAINTAINING AND TROUBLE SHOOTING THE MASTER CPU, MASTER COMMUNICATIONS DEVICES, AND MASTER PERIPHERAL EQUIPMENT. THE TRAINING SHALL COVER BOTH PRESENTATION OF RECOMMENCED PROCEDURES, AS WELL AS "HANDS ON" DEMONSTRATIONS OF METHODS TO ISOLATE, DETERMINE AND CORRECT EQUIPMENT.

5. FOLLOW-UP COMPUTER OPERATION TRAINING SHALL CONSIST OF AT LEAST EIGHT (8) HOURS OF TRAINING FOR UP TO FIVE CITY DESIGNATED PERSONS. IT SHALL BE HELD DURING THE 180-DAY GUARANTEE PERIOD AND IN CITY SUPPLIED FACILITIES. IT SHALL INCORPORATE A MANAGERIAL OVERVIEW OF THE SYSTEM AND SYSTEM OPERATION PROCEDURES TO FULLY FAMILIARIZE CITY PERSONAL WITH THE DAY-TO-DAY OPERATION OF THE SYSTEM.

6. THE CONTRACTOR SHALL PROVIDE ALL COURSE MATERIALS FOR ALL TRAINING SESSIONS, INCLUDING OPERATION MANUALS, REPAIR MANUALS, TEST EQUIPMENT, DEMONSTRATION MATERIALS, AND OTHER MATERIALS FOR DEVICES TO ASSURE A USEFUL SESSION. INSTRUCTORS SHALL BE KNOWLEDGEABLE ON THE OPERATION OF THE SYSTEM PROVIDED AND BE CABLE OF EFFICIENTLY AND ACCURATELY PRESENTING THIS KNOWLEDGE TO THE TRAINEES.

7. THE TRAINING SHALL BE ARRANGED AT A TIME MUTUALLY AGREEABLE TO THE CITY AND CONTRACTOR. THE COURSE SHALL COVER FAMILIARIZATION AND OPERATION TRAINING IN THE USE OF THE SYSTEM. THE TRAINING SHALL BE BASED UPON (HANDS-ON) OPERATION OF THE MASTER PERIPHERALS, COMMUNICATION DEVICES AND LOCAL CONTROLLERS.

I. BENCHMARK TESTING WILL BE ACCOMPLISHED AT THE SYSTEM SUPPLIER'S FACILITIES IN CONJUNCTION WITH THE TRAINING COURSE. THE PURPOSE OF BENCHMARK TESTING IS TO DEMONSTRATE THE CAPABILITIES OF THE SYSTEM THAT THE SUPPLIER INTENDS TO FURNISH. THE COMPUTER, PERIPHERAL DEVICES, AND ELEMENTS UTILIZED FOR THE TESTS NEED NOT BE THE SPECIFIC ITEMS WHICH WILL BE INSTALLED IN THE CITY BUT SHALL BE OF THE SAME TYPE, MODEL, AND CAPACITY. USE OF THE ACTUAL EQUIPMENT TO BE INSTALLED IN THE CITY IS PREFERRED. BENCHMARK TESTING SHALL INCLUDE THE FOLLOWING:

1. LOAD AND OPERATE A BENCHMARK PROGRAM ON THE COMPUTER, UTILIZING ALL PERIPHERAL DEVICES AND AT LEAST TWO ACTUATED EIGHT PHASE INTERSECTION CONTROLLERS. THE BENCHMARK PROGRAMS SHALL CONTAIN PARAMETERS FOR AT LEAST 15 LOCAL INTERSECTIONS, AT LEAST 10 SENSOR INPUTS WITH THE ABILITY TO SIMULATE FIELD VOLUME AND OCCUPANCY DETECTOR DATA, AND SHALL OPERATE WITH AT LEAST 3 ON-STREET MASTER CONTROLLERS.

2. THE BENCHMARK TESTS SHALL EXERCISE ALL FEATURES OF THE HARDWARE, SOFTWARE, COMMUNICATIONS SYSTEMS AND LOCAL CONTROLLERS AND SHALL BE A MINIMUM OF 48 HOURS OF CONTINUOUS OPERATION.

J. ITEM 632.27 OF THE CONSTRUCTION AND MATERIAL SPECIFICATIONS IS MODIFIED AS FOLLOWS:

1. PART 5, FUNCTIONAL TEST, SHALL HAVE THE FOLLOWING REQUIREMENTS ADDED:

a. ALL HARDWARE, SOFTWARE, AND PERFORMANCE FUNCTIONS REQUIRED IN THE SPECIFICATIONS SHALL BE INDIVIDUALLY DEMONSTRATED TO THE ENGINEER BY THE CONTRACTOR TO ASSURE COMPLIANCE AND TO SHOW THAT THE SYSTEM IS COMPLETELY FUNCTIONAL AND READY FOR SERVICE.
b. TRAINING SHALL HAVE BEEN PROVIDED TO CITY REPRESENTATIVES IN THE MANNER REQUIRED AND SHALL BE COMPLETED.

2. PART 6, PERFORMANCE TEST (10-DAY TEST) SHALL BE MODIFIED ONLY AS FOLLOWS:

a. THE 10-DAY CENTRAL OFFICE MONITOR PERFORMANCE TEST SHALL NOT COMMENCE BEFORE THE 10-DAY PERFORMANCE TEST FOR ALL INTERSECTIONS HAS BEEN SUCCESSFULLY COMPLETED.

b. THE LIST OF MAJOR MALFUNCTIONS IN 632.07-6 SHALL BE EXPANDED TO INCLUDE:

(1) FAILURE OF LOCAL CONTROLLER TO CONTROL TRAFFIC SAFELY AND IN CONFORMANCE WITH THE OHIO MANUAL OF UNIFORM TRAFFIC CONTROL DEVICES.

(2) FAILURE OF THE MASTER CONTROLLER (WITH SYSTEM MONITOR) TO CORRECTLY SUPERVISE AND CONTROL THE SYSTEM, OR TO ACCEPT AND PROCESS TRAFFIC DATA FROM THE FIELD OR TO PROPERLY REPORT SYSTEM STATUS AND MALFUNCTIONS.

(3) FAILURE OF MORE THAN TWO INTERSECTIONS, IN ANY 24 HOUR PERIOD, TO FUNCTION COMPLETELY IN THE MANNER CALLED FOR IN THE SPECIFICATION WITHOUT LOSS OF COMMUNICATIONS OR REVERTING TO STANDBY OPERATION.

(4) FAILURE OF ANY SINGLE INTERSECTION MORE THAN 3 TIMES DURING A 5 DAY PERIOD TO FUNCTION COMPLETELY IN THE MANNER CALLED FOR IN THE SPECIFICATION WITHOUT LOSS OF COMMUNICATION FOR REVERTING TO STANDBY OPERATION.

(5) SOFTWARE ERROR WHICH CAUSES THE SYSTEM TO CEASE TO OPERATE THE TRAFFIC CONTROL SYSTEM OR CAUSES ON UNSAFE CONDITION ON THE STREET.

(6) THE APPEARANCE OF ANY PROBLEM WHICH, IN THE OPINION OF THE ENGINEER, HAS A SIGNIFICANT EFFECT UPON THE RELIABILITY, SAFETY OR OPERATION ON THE SYSTEM.

c. DURING THE 10-DAY PERFORMANCE TEST, THE ENGINEER OR THE TRAINED REPRESENTATIVES OF THE CITY, SHALL EXERCISE THE SYSTEM AND DOCUMENT THE PERFORMANCE OF ALL SPECIFIED FEATURES AND ANY OTHER EVENTS WHICH COULD BE EXPECTED TO OCCUR IN AN OPERATIONAL TRAFFIC CONTROL SYSTEM INCLUDING THE SIMULATION OF FAILURES.

K. THE CONTRACTOR SHALL PROVIDE THE CITY WITH UPGRADES TO THE CLOSED LOOP SYSTEM SOFTWARE AT NO ADDITIONAL CHARGE FOR A PERIOD OF TWO (2) YEARS FROM THE DATE OF PROJECT ACCEPTANCE.

L. PAYMENT FOR ITEM 633 CENTRAL OFFICE MONITOR, AS PER PLAN WILL BE MADE AT THE CONTRACT UNIT PRICE FOR EACH CENTRAL OFFICE MONITOR IN PLACE AND FULLY OPERATIONAL AS SHOWN IN THE PLANS AND SPECIFICATIONS.

THE COSTS OF THE REQUIRED TRAINING AND BENCHMARK TESTING, INCLUDING COURSE MATERIALS, TRAVEL, AND SUBSISTENCE AND RELATED COSTS FOR ALL INSTRUCTORS AND ATTENDEES, SHALL THE RESPONSIBILITY OF THE CONTRACTOR AND SHALL BE INCIDENTAL TO THE UNIT PRICES BID FOR THE VARIOUS ITEMS OF EQUIPMENT UNDER THE CONTRACT.

<u>ITEM 633 CONTROLLER, ACTUATED, 8 PHASE, SOLID STATE DIGITAL MICROPROCESSOR, AS PER PLAN</u>

A. THIS ITEM OF WORK SHALL CONSIST OF FURNISHING AND INSTALLING ACTUATED, SOLID STATE DIGITAL MICROPROCESSOR TYPE CONTROLLERS WITH SECONDARY COORDINATOR, MENU DRIVEN PROMPTS, INTERNAL TIME BASED COORDINATION, TELEMETRY UNIT, AND ALL OTHER ACCESSORIES THAT ARE NECESSARY TO MAKE THE CONTROLLER COMPLETELY FUNCTIONAL AND OPERATIONAL AS SHOWN IN THE PLANS.

B. A TYPE 1 CONTROLLER AND TYPE 1 CABINET SHALL BE USED. BOTH THE CONTROLLER AND CABINET SHALL CONFORM TO O.D.O.T. SPECIFICATION 633 AND NEMA STANDARD PUBLICATION TS-2 AND SHALL HAVE THE FOLLOWING FEATURES:

1. THE CABINET SHALL HAVE THE FOLLOWING FEATURES:

a. POLE OR GROUND-MOUNTED WEATHERPROOF CABINET.
b. A SERVICE LAMP WITH DOOR ACTIVATED ON/OFF SWITCH.

2. THE CABINET AT US 36 AND JEFFERSON STREET SHALL ACCOMMODATE UP TO SIXTEEN (16) LOAD SWITCHES. THE CABINETS AT ALL OTHER INTERSECTIONS SHALL ACCOMMODATE UP TO TWELVE (12) LOAD SWITCHES.

3. THE LOAD SWITCHES SHALL PROVIDE INPUT AND OUTPUT INDICATIONS.

CALCULATED: : :
CHECKED: : :

GENERAL NOTES

CHP-36-14.23
PID NO. 20258

P:\98240002\DWG\9802GEN3.DWG.dwg - NOV 18, 1999 - 15:11:00

4. DETECTOR TEST SWITCHES SHALL BE PROVIDED FOR EACH VEHICLE AND PEDESTRIAN PHASE. THE SWITCHES SHALL BE PUSH-BUTTON SWITCHES USED TO MANUALLY PLACE CALLS ONTO THE CONTROLLER DURING ACTIVATED OPERATION. THEY SHALL BE IN PARALLEL WITH THE VEHICLE DETECTOR RELAY CLOSURE AND PEDESTRIAN PUSH-BUTTON CIRCUITS.

5. THE FOLLOWING SWITCHES SHALL BE ACCESSIBLE VIA THE POLICE PANEL DOOR; SIGNAL SHUTDOWN; FLASH CONTROL; AND MANUAL CONTROL; AND PUSH BUTTON.

6. LIGHTNING PROTECTION AND SURGE PROTECTION SHALL BE PROVIDED AS FOLLOWS:

a. ALL PEDESTRIAN DETECTOR CIRCUITS SHALL BE OPTICALLY ISOLATED FROM THE STREET SIDE.
b. THE MAIN POWER LINE SHALL BE PROTECTED BY AN EDCO PROTECTOR.

7. ALL INTEGRATED CIRCUITS FOR THE CONTROLLER SHALL BE PLUG-IN MOUNTED ON CIRCUIT BOARDS.

8. THE MALFUNCTIONAL MANAGEMENT UNIT SHALL HAVE THE FOLLOWING FEATURES:

a. PERFORM ALL FUNCTION AS SPECIFIED IN NEMA STANDARD PUBLICATION TS-2.
b. DETECT FAULTY SEQUENCING OF SIGNALS ON A PER CHANNEL BASIS.
c. MONITOR AC+ LINE VOLTAGE FOR BROWN-OUT AND POWER INTERRUPTION.
d. PERMIT +24V MONITOR AND CVM FAULT LATCHING VIA FRONT PANEL SWITCH.
e. DETECT ABSENCE OF A LOGIC INPUT TRANSITION FROM THE CONTROLLER.
f. WALK DISABLE OPTION FOR RED MONITORING VIA FRONT PANEL SWITCH.
g. DETECT ABSENCE OF PROGRAM CARD AND CONSTANT RESET INPUT.
h. INTERNAL DIAGNOSTICS.
i. RED, YELLOW, GREEN, AND WALK INPUT FOR EACH CHANNEL MONITORED.
j. FAULT CONDITIONS, INCLUDING:

(1) CONFLICT
(2) RED FAIL
(3) CLEARANCE
(4) DUAL INDICATION
(5) CVM/WD
(6) +24 V-1
(7) +24 V-2
(8) PROGRAM CARD

k. REAL TIME CLICK TO FLAG DATE AND TIME MONITOR IS TRIGGERED BY A FAULT CONDITION.
l. NON-VOLATILE MEMORY FOR REVIEW BY FRONT PANEL A DATA LOG OF PREVIOUS FAULTS.

C. INSTALLATION REQUIREMENTS:

1. EACH UNIT SUPPLIED SHALL INCLUDE THE FOLLOWING:

a. TWO SETS WIRING DIAGRAMS AND OPERATIONAL MANUALS.
b. ALL NECESSARY WIRING AND HARDWARE FOR INSTALLATION IN CABINET SUPPLIED AND FOR OPERATIONAL HOOK-UP TO THE CONTROLLER SUPPLIED.
c. A PARTS LIST OF ALL PROPRIETARY COMPONENTS AND GENERIC EQUIVALENTS IF AVAILABLE.
d. ALL PROGRAMMING SHALL BE DONE WITH FRONT PANEL MOUNTED SWITCHES.

D. AT CONTROLLER LOCATIONS INDICATED IN THE PLANS TO HAVE A "PHONE DROP," THE CONTROLLER AND CABINET SHALL INCLUDE A TELEPHONE MODEM COMPLETELY WIRED TO REPORT CABINET FAILURES, DETECTOR FAILURES, AND TRAFFIC COUNTS.

THE CONTRACTOR SHALL FURNISH FOR APPROVAL A CABINET PLAN SHOWING COMPONENT PLACEMENT.

E. PAYMENT FOR ITEM 633 CONTROLLERS, ACTUATED, BY PHASE, SOLID STATE DIGITAL MICROPROCESSOR, AS PER PLAN WILL BE MADE AT THE CONTRACT PRICE FOR EACH CONTROLLER IN PLACE, INCLUDING PRE-WIRED CABINET COMPLETELY INSTALLED, WIRED, TESTED, AND ACCEPTED.

ITEM 633 CONTROLLER ITEM, MISC: PREEMPTION (LUMP SUM), AS PER PLAN

A. THIS WORK ITEM SHALL CONSIST OF FURNISHING AND INSTALLING ALL ITEMS NECESSARY TO PROVIDE A WORKING TRAFFIC SIGNAL PREEMPTION SYSTEM THAT ARE NOT INCLUDED IN ITEM 633 CONTROLLER ITEM MISC: PREEMPTION (EACH). THIS SHALL INCLUDE THE FOLLOWING WORK:

1. THE CONTRACTOR SHALL FURNISH THE CITY OF URBANA WITH ALL EMITTERS, TRANSMITTERS, SWITCHES, WIRING, AND OTHER REQUIRED VEHICLE EQUIPMENT TO PROVIDE TRAFFIC SIGNAL PREEMPTION CAPABILITY FOR 23 VEHICLES. THE CITY SHALL BE RESPONSIBLE FOR INSTALLING ALL VEHICLE EQUIPMENT.

2. THE CONTRACTOR SHALL FURNISH AND INSTALL ALL SOFTWARE REQUIRED TO CALIBRATE, LOG, AND OPERATE THE TRAFFIC SIGNAL PREEMPTION SYSTEM INSTALLED AT EACH INTERSECTION. THE SOFTWARE SHALL BE CAPABLE OF OPERATING ON AN IBM OR IBM COMPATIBLE PERSONAL COMPUTER WITH WINDOWS 98, WINDOWS NT 4.0 OR HIGHER OPERATING SYSTEM. TWO (2) OPERATING AND INSTRUCTION MANUALS SHALL BE SUPPLIED WITH THE SOFTWARE. REVISIONS AND UPDATES TO THE SOFTWARE SHALL BE AT NO COST TO THE CITY FOR A PERIOD OF TWO (2) YEARS FROM THE DATE OF ACCEPTANCE OF THE SYSTEM.

THE EQUIPMENT AND SOFTWARE PROVIDED SHALL BE CAPABLE OF, AT MINIMUM, LOGGING VEHICLE IDENTIFICATION NUMBER, DATE, AND TIME OF EACH ACTUATION.

3. THE CONTRACTOR SHALL PROVIDE TRAINING FOR UP TO FIFTEEN (15) PERSONS IN THE OPERATION OF THE PREEMPTION SYSTEM. THIS TRAINING SHALL CONSIST OF HANDS ON INSTRUCTION FOR A MINIMUM OF EIGHT (8) HOURS.

THE CONTRACTOR SHALL PROVIDE TRAINING FOR UP TO FOUR (4) PERSONS IN THE INSTALLATION AND MAINTENANCE OF THE PREEMPTION SYSTEM EQUIPMENT. THIS TRAINING SHALL CONSIST OF A MINIMUM OF EIGHT (8) HOURS OF INSTRUCTION.

TRAINING SHALL BE HELD IN CITY SUPPLIED LOCATION. TRAINING SHALL BE CONDUCTED BY SOMEONE WHO REGULARLY PROVIDES TRAINING ON THIS EQUIPMENT.

B. PAYMENT FOR ITEM 633 "CONTROLLER ITEM, MISC: PREEMPTION (LUMP SUM)" WILL BE MADE AT CONTRACT LUMP SUM PRICE FOR PREEMPTION IN-PLACE AND FULLY OPERATIONAL AS SHOWN IN THE PLANS, EXCEPT FOR THOSE ITEMS BID SEPARATELY. THE COST OF TRAINING, INCLUDING COURSE MATERIAL, TRAVEL SUBSISTENCE AND RELATED COSTS SHALL BE ENTIRELY BORN BY THE CONTRACTOR AND SHALL BE INCIDENTAL TO THE PREEMPTION EQUIPMENT.

ITEM 633 CONTROLLER ITEM MISC: PREEMPTION (EACH), AS PER PLAN

A. THIS ITEM OF WORK SHALL CONSIST OF FURNISHING AND INSTALLING PREEMPTION EQUIPMENT IN THE LOCATIONS AND LOCAL CONTROLLERS AS SHOWN IN THE PLANS. THE PREEMPTION SHALL CONFORM TO O.D.O.T. SPECIFICATION 633 AND SHALL UTILIZE COMMUNICATIONS TO IDENTIFY THE PRESENCE OF AN APPROACHING EMERGENCY PRIORITY VEHICLE. IT SHALL CAUSE THE TRAFFIC SIGNAL CONTROLLER TO SELECT A PRE-PROGRAMMED PREEMPTION PLAN THAT WILL DISPLAY AND HOLD THE DESIRED SIGNAL PHASE FOR THE DIRECTION OF THE EMERGENCY VEHICLE. THIS PAY ITEM SHALL INCLUDE ALL WORK NECESSARY TO MAKE THE PREEMPTION OPERATIONAL AT EACH OF THE PROJECT INTERSECTIONS SPECIFIED.

B. EACH INTERSECTION SHOWN IN THE PLANS SHALL BE SUPPLIED WITH THE FOLLOWING COMPONENTS, AS DESCRIBED ON THIS SHEET.

1. PREEMPTION DETECTOR UNIT.
2. PREEMPTION DETECTOR CABLE.
3. PREEMPTION PHASE SELECTOR AND INTERFACE WIRING PANEL.
4. CONFIRMATION LIGHTING.

C. THE INTERSECTION EQUIPMENT PROVIDED SHALL BE IN CONFORMANCE WITH THE FOLLOWING SPECIFICATIONS:

1. THE SYSTEM SHALL EMPLOY EITHER SOUND, LIGHT, GPS, OR RADIO DETECTION TECHNIQUES TO DETERMINE AND LOG THE PRESENCE OF THE EMERGENCY VEHICLE. THE SYSTEM SHALL DETECT THE PRESENCE OF THE VEHICLE THROUGH AN EMITTING DEVICE LOCATED ON THE EMERGENCY VEHICLE.

2. THE SYSTEM SHALL ACTIVATE THE PREEMPTION SEQUENCE BY APPLYING A SIGNAL TO ONE OF THE CONTROLLER'S PREEMPT INPUTS. THE SYSTEM SHALL BE COMPLETELY COMPATIBLE WITH THE NEMA CONTROLLER.

3. THE PREEMPT SHALL BE ACTIVATED TO CALL GREEN BALL SIGNAL DISPLAY FOR THE DIRECTION THE EMERGENCY VEHICLE IS APPROACHING. UNLESS OTHERWISE SPECIFIED, ALL OTHER APPROACHES TO THE INTERSECTION SHALL BE RED. AT LOCATIONS OF COMPLEX AND/OR ONE-WAY OPERATION, THE CITY MAY REQUIRE SPECIAL PREEMPTION SIGNAL DISPLAYS. THE CONTRACTOR SHALL COORDINATE THE PREEMPT DISPLAYS WITH THE CITY.

4. THE SYSTEM WILL PROVIDE CONFIRMATION OF THE RECEIPT OF A PREEMPTION SIGNAL TO THE EMERGENCY VEHICLE DRIVER BY THE USE OF ONE CONFIRMATION LIGHT PER EACH APPROACH DIRECTION, MOUNTED IN A CONSPICUOUS LOCATION AT THE INTERSECTION.

5. THE EQUIPMENT SHALL BE EASILY MOUNTED AND EASILY REMOVABLE AND REPLACEABLE WITHIN THE CABINET. THE EQUIPMENT SHALL BE SUPPLIED COMPLETELY WIRED IN THE CONTROLLER CABINET AND TESTED.

6. THE SYSTEM SHALL BE CAPABLE OF PREEMPTING AND RECEIVING PRIORITY FOR EACH APPROACH TO THE INTERSECTION.

D. DETECTOR UNITS SHALL CONSIST OF A LIGHTWEIGHT, WEATHERPROOF AND DIRECTIONAL ASSEMBLY. EACH UNIT SHALL BE 360 DEGREE ADJUSTABLE AND CAPABLE OF DETECTING AN EMERGENCY VEHICLE UP TO 1500 FEET AWAY. DETECTORS SHALL BE MOUNTED ON THE MAST ARMS AS SPECIFIED IN THE PLANS. THE MAST ARMS SHALL BE DRILLED AND TAPPED TO ACCEPT A RIDGID MOUNTING AND SHALL BE SEALED AGAINST MOISTURE. THE DETECTOR UNIT SHALL BE CAPABLE OF SENDING THE PROPER ELECTRICAL SIGNAL TO THE TRAFFIC SIGNAL CONTROLLER VIA THE PREEMPT DETECTOR CABLE. RECEIVING UNITS SHALL BE SUPPLIED WITH MOUNTING HARDWARE.

E. HOME RUN DETECTOR CABLE SHALL BE PROVIDED TO CONNECT THE PREEMPT DETECTORS TO THE PHASE SELECTORS IN THE LOCAL CONTROLLER CABINET. PREEMPTION DETECTOR CABLE SHALL CONFORM TO O.D.O.T. SPECIFICATION 632 AND THE PREEMPTION EQUIPMENT MANUFACTURER'S RECOMMENDATIONS. THE CABLE SHALL BE APPROVED FOR BOTH OVERHEAD AND UNDERGROUND USE. THE JACKET SHALL WITHSTAND EXPOSURE TO SUNLIGHT AND ATMOSPHERIC TEMPERATURES AND STRESSES REASONABLY EXPECTED IN NORMAL INSTALLATIONS.

F. PREEMPTION PHASE SELECTORS SHALL BE FURNISHED AND INSTALLED IN THE LOCAL CONTROLLER CABINET AT EACH INTERSECTION. THIS SHALL INCLUDE ALL WIRING INTERFACE PANELS AND OTHER ACCESSORIES THAT ARE NECESSARY TO MAKE THE PREEMPT PHASE SELECTORS COMPLETELY FUNCTIONAL AND OPERATIONAL. THE PHASE SELECTOR SHALL CONSIST OF A MODULE OR MODULES THAT WILL PROVIDE THE NECESSARY INPUTS TO THE CONTROLLER. PHASE SELECTORS SHALL BE SUPPLIED WITH A SUFFICIENT NUMBER OF CHANNELS TO PROVIDE PREEMPTION FOR ALL APPROACHES TO THE INTERSECTION SEPARATELY. THE PHASE SELECTOR SHALL HAVE FRONT PANEL INDICATORS FOR ACTIVE PREEMPT CHANNEL STATUS. IT SHALL HAVE TEST SWITCHES TO ACTIVATE ALL PREEMPT CHANNELS. THE PHASE SELECTORS SHALL BE POWERED THROUGH THEIR OWN POWER SUPPLY.

G. PREEMPTION CONFIRMATION LIGHTS SHALL TYPICALLY BE INSTALLED IN A CONSPICUOUS LOCATION ON THE SIGNAL MAST ARMS AND SHALL BE VISIBLE FROM ALL INTERSECTION APPROACHES. THE CONFIRMATION LIGHTS SHALL BE ACTIVATED TO INDICATE THAT THE PREEMPTION SYSTEM HAS PROVIDED A PREEMPT INPUT TO THE CONTROLLER. THE CONFIRMATION LIGHTS SHALL DISPLAY A FLASHING INDICATION IN THE DIRECTION FROM WHICH THE PREEMPTION CALL IS RECEIVED AND SOLID INDICATIONS IN ALL OTHER DIRECTIONS. THE DESIGN AND INSTALLATION OF CONFIRMATION LIGHTS SHALL IN ALL OTHER RESPECTS BE AS DESIGNATED BY THE PREEMPTION SYSTEM MANUFACTURER AND AS COMMONLY USED FOR THE MANUFACTURER'S PREEMPTION SYSTEM.

THE CONFIRMATION LIGHTS SHALL BE DRIVEN BY TWO LOAD SWITCHS IN THE LOCAL CONTROLLER CABINET. NO OTHER INDICATIONS SHALL BE DRIVEN BY THESE LOAD SWITCHES.

H. THE CONTRACTOR SHALL THOROUGHLY CHECK OUT THE INSTALLED SYSTEM, AS A MINIMUM, THE CONTRACTOR SHALL VERIFY THAT ALL CONNECTIONS ARE PROPERLY MADE TO THE CONTROLLER CABINETS. THE CONTRACTOR SHALL CHECK THAT THE RANGE SETTING IS PROPER FOR EACH INTERSECTION. THE CONTRACTOR SHALL DETERMINE THAT ALL PHASE SELECTORS ARE SELECTING THE PROPER PHASE AND TIMING ACCURATELY. THE CONTRACTOR SHALL VERIFY THAT ALL VEHICLE EMITTERS ARE BEING PROPERLY DETECTED.

I. THIS ITEM SHALL ALSO INCLUDE ANY EXTRA CABINET SPACE NECESSARY TO LOCATE PREEMPTION EQUIPMENT IN THE LOCAL CONTROLLER CABINETS WHERE INDICATED IN THE PLANS.

J. PAYMENT FOR ITEM 633 CONTROLLER ITEM, MISC: PREEMPTION (EACH) WILL BE AT THE CONTRACT UNIT PRICE, COMPLETELY INSTALLED, WIRED, TESTED, AND ACCEPTED.

ALTERNATE BID: ITEM 633 CONTROLLER ITEM MISC: PREEMPTION (LUMP SUM), AS PER PLAN

THE CONTRACTOR SHALL PERFORM ALL WORK AS DESCRIBED IN ITEM 633 CONTROLLER ITEM MISC: PREEMPTION (LUMP SUM), AS PER PLAN. ALL PREEMPTION EQUIPMENT SHALL BE FULLY COMPATIBLE WITH THE OPTICOM REPORTER SERIES PRIORITY CONTROL SYSTEM MANUFACTURED BY 3M TRAFFIC CONTROL SYSTEMS.

PAYMENT FOR ALTERNATE BID: ITEM 633 CONTROLLER ITEM MISC: PREEMPTION (LUMP SUM), AS PER PLAN WILL BE AS DESCRIBED IN THE OPEN BID ITEM.

ALTERNATE BID: ITEM 633 CONTROLLER ITEM MISC: PREEMPTION (EACH), AS PER PLAN

THE CONTRACTOR SHALL PERFORM ALL WORK AS DESCRIBED IN ITEM 633 CONTROLLER ITEM MISC: PREEMPTION (EACH), AS PER PLAN. ALL PREEMPTION EQUIPMENT SHALL BE FULLY COMPATIBLE WITH THE OPTICOM REPORTER SERIES PRIORITY CONTROL SYSTEM MANUFACTURED BY 3M TRAFFIC CONTROL SYSTEMS. COMPONENTS SHALL BE MATCHED COMPONENTS AND EMPLOY AN ENCODED OPTICAL COMMUNICATION FULLY COMPATIBLE WITH THE 3M OPTICOM REPORTER SERIES EQUIPMENT.

PAYMENT FOR ALTERNATE BID: ITEM 633 CONTROLLER ITEM MISC: PREEMPTION (EACH), AS PER PLAN WILL BE AS DESCRIBED IN THE OPEN BID ITEM.

CALCULATED: : :
CHECKED: : :

GENERAL NOTES

CHP-36-14.23
PID NO. 20258

P:\98240002\DWG\9802GEN4.DWG.dwg - NOV 18, 1999 - 15:14:42

PEDESTRIAN ACTUATION

UNLESS OTHERWISE DESIGNATED IN THE PLAN, PHASES 2 AND 6 ARE DESIGNATED AS THE COORDINATED PHASES AND WILL BE SET ON RECALL. THE PEDESTRIAN PUSHBUTTONS INSTALLED AT EACH INTERSECTION SHALL BE USED TO ACTUATE THE SIDE STREET PHASES.

ITEM 633 CONTROLLER, MASTER, TRAFFIC RESPONSIVE, AS PER PLAN

A. THIS ITEM OF WORK SHALL CONSIST OF FURNISHING AND INSTALLING A SOLID-STATE DIGITAL MICROPROCESSOR TYPE TRAFFIC RESPONSIVE MASTER CONTROLLER WITH MENU DRIVEN PROMPTS, INTERNAL TBC, TELEMETRY UNIT, IN THE LOCAL CONTROLLER CABINET, AND ALL OTHER ACCESSORIES THAT ARE NECESSARY TO MAKE THE MASTER COMPLETELY FUNCTIONAL AND OPERATIONAL AS SHOWN IN THE PLANS. THIS ITEM SHALL ALSO INCLUDE THE EXTRA CABINET SPACE NECESSARY TO BE LOCATED IN THE LOCAL CONTROLLER CABINETS WHERE INDICATED IN THE PLANS.

B. THE MASTER CONTROLLER SHALL CONFORM TO O.D.O.T. SPECIFICATION 633 AND NEMA STANDARD PUBLICATION TS-2 AND SHALL HAVE THE FOLLOWING FEATURES:

1. IT SHALL GENERATE SYSTEM PATTERN COMMANDS TO LOCAL INTERSECTION CONTROLLERS WITHIN ITS CONTROL AREA IN RESPONSE TO PREVAILING TRAFFIC CONDITIONS AS INDICATED BY SAMPLING SENSORS STRATEGICALLY PLACED IN THE CONTROL AREA. THE MASTER SHALL ALSO ALLOW PREPROGRAMMED TIME OF DAY SELECTION OF PATTERNS.
2. IT SHALL MONITOR THE OPERATION OF THE LOCAL INTERSECTION CONTROLLERS AND SHALL INITIATE THE FAILURE REPORTS IF MALFUNCTIONS ARE DETECTED. THE MASTER SHALL GENERATE SYSTEM OPERATION STATUS REPORTS FOR PRINTING AT THE CENTRAL OFFICE MONITOR.
3. IT SHALL BE CAPABLE OF OPERATING IN ANY OF THE FOLLOWING MODES:

a. TRAFFIC RESPONSIVE WHEREBY PATTERN SELECTION IS BASED ON DYNAMIC TRAFFIC CONDITIONS AS MEASURED BY SYSTEM SENSORS LOCATED IN THE CONTROL AREA.
b. TIME OF DAY/DAY OF WEEK WHEREBY PATTERN SELECTION IS BASED ON A PREPROGRAMMED BASIS WITH AUTOMATIC ADJUSTMENTS FOR SEASONAL CHANGES.
c. MANUAL OVERRIDE WHEREBY PATTERN SELECTION IS BASED ON OPERATOR COMMAND AT THE CENTRAL OFFICE MONITOR OR TRAFFIC RESPONSIVE MASTER CONTROLLER SITE.

C. ALL INTEGRATED CIRCUITS FOR THE CONTROLLER SHALL BE PLUG IN MOUNTED ON CIRCUIT BOARDS.

D. THE MASTER CONTROLLER SHALL HAVE THE FOLLOWING CAPACITIES:

1. TOTAL LOCAL INTERSECTION CONTROLLERS: 30
2. SYSTEM SENSOR DETECTOR UNITS: 48
3. THERE SHALL BE A MINIMUM OF 30 SELECTABLE PATTERNS INCLUDING AN ADDITIONAL 4 SPECIAL PATTERNS. EACH PATTERN SHALL CONSIST OF A COMBINATION OF CYCLE, OFFSET, AND SPLIT NUMBERS FOR EACH INTERSECTION IN THE SYSTEM. THE MASTER SHALL BE CAPABLE OF DIRECTING THE SYSTEM INTO FREE OPERATION. PATTERNS SELECTABLE FROM THE FOLLOWING MINIMUM PARAMETER RANGES:

a. CYCLES: SIX (6)
b. OFFSETS: FIVE (5)
c. SPLITS: SIXTEEN (16)

E. SYSTEMS SENSORS SHALL BE DISTRIBUTED TO A MAXIMUM CAPACITY OF EIGHT (8) PER INTERSECTION, BUT NOT TO EXCEED THE TOTAL SENSOR CAPACITY.

F. THE MASTER CONTROLLER SHALL HAVE THE FOLLOWING FUNCTIONAL REQUIREMENTS:

1. PATTERN SELECTION DURING NORMAL TRAFFIC RESPONSIVE OPERATION SHALL BE BASED ON THE FOLLOWING QUANTITATIVE TRAFFIC FLOW PARAMETERS:

a. VOLUME LEVEL OF ARTERIAL TRAFFIC FLOW.
b. DIRECTIONALITY OF ARTERIAL TRAFFIC FLOW.
c. RATIO OF ARTERIAL TRAFFIC FLOW TO NON-ARTERIAL TRAFFIC.

2. PATTERN SELECTION DURING SPECIAL TRAFFIC RESPONSIVE OPERATION SHALL BE BASED ON THE FOLLOWING PARAMETERS:

a. NORMAL RESPONSIVE OPERATION OVERRIDE BY DETECTION OF HIGH OCCUPANCY ON SELECTED SYSTEM SENSORS.
b. NORMAL RESPONSIVE OPERATION OVERRIDE BY DETECTION OF QUEUE LENGTH OF DURATION ON SELECTED SYSTEM SENSORS.

3. PREFERENTIAL TRANSFER OF PATTERNS SHALL BE ACCOMPLISHED BY PROGRAMMABLE THRESHOLD VALUES. PROGRAMMABLE THRESHOLD VALUES SHALL ALSO BE PROVIDED FOR SPECIAL PATTERNS.

4. THE FOLLOWING SYSTEM SENSOR DATA SHALL FORM THE BASIS FOR ALL RESPONSIVE PATTERNS INITIATED BY THE MASTER:

a. VOLUME, OCCUPANCY AND QUEUE DATA.
b. EACH SYSTEM SENSOR SHALL BE CAPABLE OF SELECTIVE WEIGHTING.
c. SYSTEM SENSOR DATA SHALL BE AVERAGED ON A MOVING BASIS, UTILIZING A USER PROGRAMMABLE TIME FACTOR.
d. EACH SYSTEM SENSOR SHALL BE MONITORED FOR THE CONSTANT CALL, ABSENCE OF CALL, AND ERRATIC OUTPUT. THERE SHALL BE AN OPTION TO ELIMINATE THE MONITORING OF ABSENCE OF CALLS DURING LIGHT TRAFFIC PERIODS ON A TIME OF DAY BASIS. SENSORS WHICH FAIL ANY MONITORING TEST SHALL BE AUTOMATICALLY DELETED FROM VOLUME AND OCCUPANCY CALCULATIONS. UPON RESUMPTION OF SATISFACTORY OPERATION, SENSORS SHALL AUTOMATICALLY RESUME SATISFACTORY OPERATION, SENSORS SHALL AUTOMATICALLY RESUME INPUT TO VOLUME AND OCCUPANCY CALCULATIONS. A USER PRESCRIBED MINIMUM NUMBER OF DESIGNATED SENSORS SHALL BE REQUIRED TO MAINTAIN RESPONSIVE OPERATION. THE MINIMUM NUMBER OF OPERATIONAL SENSORS SHALL BE PROGRAMMABLE FOR EACH COMPUTATIONAL CHANNEL. IF FEWER THAN THE PRESCRIBED NUMBER OF SYSTEM SENSORS ARE OPERATIONAL, THEN THE MASTER SHALL REVERT TO THE TIME OF DAY, DAY OF WEEK MODE.
e. EACH COMPUTATIONAL CHANNEL SHALL BE ASSIGNED FROM UP TO TWELVE (12) DIFFERENT SYSTEM SENSORS FROM THE TOTAL OF 48.

5. IT SHALL BE POSSIBLE TO SELECT ANY SYSTEM PATTERN FROM THE MASTER ON A PRE-PROGRAMMED TIME OF DAY, DAY OF WEEK BASIS. THERE SHALL BE A TIME OF DAY OVERRIDE OF RESPONSE OPERATION. TIME OF DAY OPERATION SHALL UTILIZE A 99 YEAR CALENDAR-CLOCK WITH AUTOMATIC DAYLIGHT SAVINGS TIME CHANGES.

6. MEANS SHALL BE PROVIDED TO ALLOW INTER-MASTER LINKING IN ORDER TO AFFORD COORDINATION BETWEEN CONTIGUOUS SYSTEM CONTROL AREAS. THIS SHALL INCLUDE SYNCHRONIZATION OF MASTER REFERENCE CLOCKS.

7. PATTERN CHANGES FOR EACH LOCAL CONTROLLER IN THE SYSTEM SHALL BE IMPLEMENTED SMOOTHLY AND IN THE SHORTEST TIME FRAME POSSIBLE WITHOUT VIOLATING MINIMUM INTERVAL VALUES.

8. THE MASTER CONTROLLER SHALL STORE AND FORMAT MONITORED FUNCTION DATA FOR EITHER IMMEDIATE OUTPUT TO THE CENTRAL OFFICE MONITOR OR SHALL STORE DATA FOR FUTURE OUTPUT FOR A MINIMUM STORAGE PERIOD OF FORTY-EIGHT HOURS. AS A MINIMUM, THE FOLLOWING REPORTS SHALL BE INCLUDED:

a. AN ACTIVITY LOG WHICH INCLUDES TIME, INTERSECTION, AND ACTIVITY TYPE OF ALL MONITORED LOCAL INTERSECTION FAILURE CONDITIONS.
b. A SYSTEM SENSOR FAILURE LOG WHICH INCLUDES TIME, SENSOR LOCATION, AND TYPE OF FAILURE.
c. A PATTERN LOG WHICH INCLUDES THE OPERATING PATTERN AND TIME OF CHANGE WHILE IN THE RESPONSIVE MODE.
d. A SYSTEM STATUS REPORT WHICH SHOWS THE CURRENT OPERATING MODE AND PATTERN FOR ALL LOCAL INTERSECTION CONTROLLERS ON LINE.
e. A SYSTEM SENSOR DATA REPORT WHICH INCLUDES VOLUME, OCCUPANCY, AND AVERAGE SPEED FOR ALL SYSTEM SENSORS.

G. PAYMENT FOR 633 CONTROLLER, MASTER, SOLID STATE DIGITAL MICROPROCESSOR, TRAFFIC RESPONSIVE, AS PER PLAN WILL BE MADE AT THE CONTRACT PRICE FOR EACH CONTROLLER IN PLACE, COMPLETELY INSTALLED IN THE LOCAL CONTROLLER SHOWN IN THE PLANS, WIRED, TESTED, AND ACCEPTED.

ITEM 642, CHANNELIZING LINE, TYPE 2 AND ITEM 642, CENTER LINE, TYPE 2

UNLESS OTHERWISE INDICATED IN THE PLANS OR OTHERWISE DIRECTED BY THE ENGINEER, ALL CENTER LINE AND CHANNELIZING LINE, IS TO BE APPLIED OVER EXISTING MARKINGS.

ITEM 644, (THERMOPLASTIC PAVEMENT MARKINGS BY TYPE)

UNLESS OTHERWISE INDICATED IN THE PLANS OR OTHERWISE DIRECTED BY THE ENGINEER, ALL STOP LINE, LANE ARROW AND WORD ON PAVEMENT MARKINGS ARE TO BE APPLIED OVER EXISTING MARKINGS.

CALCULATED: : :
CHECKED: : :

GENERAL NOTES

CHP-36-14.23
PID NO. 20258

P:\98240002\DWG\9802GEN5.DWG.dwg - NOV 18, 1999 - 15:15:30

SHEET NUMBER																			PARTICIPATION		ITEM	EXT.	QTY.	UNITS		SEE SHEET
2	15	17	19	21	23	25	27	30	32	34	36	38	40	42	44	46	48	50	CITY, STATE & FEDERAL	100% CITY						
50																			50		603	00400	50	LF	4" CONDUIT, TYPE E	
			20					350						60		24			454		608	10000	454	SF	4" CONCRETE WALK	
			1											2	2		1		6		608	51000	6	EACH	CURB RAMP, TYPE 2	
					220								70						290		608	53000	290	SF	CURB RAMP, TYPE 1	
				115									110						225		608	54000	225	SF	CURB RAMP, TYPE 2	
	1752	39	39	131	76	235	251	899	237	247	157	72	270	145	81	110	50	160	4951		625	25400	4951	LF	CONDUIT, 2", 713.04	
	1672				12	105	216	847	220	230	130		115	232						3779	625	25402	3779	LF	CONDUIT, 2", 713.07	
	1742	250	134	281	217	300	604	1524	621	588	445	197	260	384	197	227	150		3879	4242	625	25500	8121	LF	CONDUIT, 3", 713.04	
	97													24					121		625	25900	121	LF	CONDUIT, JACKED OR DRILLED, 2"	
	320	61		124	10								187	203	97	105	55		1162		625	29000	1162	LF	TRENCH	
	1354		9	75	45	174	302	950	248	249	175	39	50	68	10	28	15		3791		625	29501	3791	LF	TRENCH IN PAVED AREA, TYPE A, AS PER PLAN	2
	45	212	126	184	137	167	170	217	166	175	134	176	123	158	100	194	128		2612		625	29600	2612	LF	TRENCH IN PAVED AREA, TYPE B	
	7	5	5	9	5	5	4	7	4	3	3	4	4	6	4	4	4	1	84		625	30700	84	EACH	PULL BOX, 713.08, 18"	
								1											1		625	30706	1	EACH	PULL BOX, 713.08, 24"	
		4	4	7	4	4	4	4	4	4	4	4	4	4	4	5	4	3	71		625	32000	71	EACH	GROUND ROD	
			1	4	2	3	2	8	3	2	4	3	3		1	6		2	44		630	79100	44	EACH	SIGN HANGER ASSEMBLY, MAST ARM	
			2	2	2	6	10	4	10	8	8	8	8	3	2	10	3		86		630	79500	86	EACH	SIGN SUPPORT ASESMBLY, POLE MOUNTED	
			7.5		15	7.5							15						45		630	80100	45	SF	SIGN, FLAT SHEET	
													3						3		630	84900	3	EACH	REMOVAL OF GROUND MOUNTED SIGN AND DISPOSAL	
													2						2		630	85100	2	EACH	REMOVAL OF GROUND MOUNTED SIGN AND REERECTION	
				4		2	4	12	4	2	4	3	1		1	6		3	46		630	87100	46	EACH	REMOVAL OF OVERHEAD MOUNTED SIGN AND REERECTION	
												1							1		630	87400	1	EACH	REMOVAL OF OVERHEAD MOUNTED SIGN AND DISPOSAL	
								8											8		630	87500	8	EACH	REMOVAL OF POLE MOUNTED SIGN AND DISPOSAL	
						2	8	38	6	4	4	4	4	1		6	1		78		630	87520	78	EACH	REMOVAL OF POLE MOUNTED SIGN AND REERECTION	
		9	8	8	8	8	8	8	8	8	8	8	8	8	6	4	6	6	127		632	00300	127	EACH	VEHICULAR SIGNAL HEAD, 3 SECTION, 12" LENS, 1-WAY	
																4			4		632	00500	4	EACH	VEHICULAR SIGNAL HEAD, 5 SECTION, 12" LENS, 1-WAY	
			6	8	8	8	8	8	8	8	8	8	8	6	4	8	4		108		632	20101	108	EACH	PEDESTRIAN SIGNAL HEAD, TYPE A2, AS PER PLAN	3
		9	8	8	8	8	8	8	8	8	8	8	8	8	6	4	6	6	127		632	25000	127	EACH	COVERING OF VEHICULAR SIGNAL HEAD	
			2	2	4	4	4		4	4	4	4	4	2	2	4	2		46		632	26000	46	EACH	PEDESTRIAN PUSH BUTTON	
		3	2	3	2	4	2		2	2	2	3	1	2	2	4	2	3	39		632	26500	39	EACH	DETECTOR LOOP	
													1			2			3		632	26501	3	EACH	DETECTOR LOOP, AS PER PLAN	3
		2	1	2	1	2	1		1	1	1	2	1	1	1	3	1	1	22		632	27105	22	EACH	LOOP DETECTOR UNIT, 2 CHANNEL, DELAY AND EXTENSION TYPE, AS PER PLAN	3
			233	346				2157						233	114		126		3209		632	40300	3209	LF	SIGNAL CABLE, 3 CONDUCTOR, NO. 14 AWG	
		815	401	792	512	611	532	1239	548	514	580	579	545	455	391		593	425	9532		632	40500	9532	LF	SIGNAL CABLE, 5 CONDUCTOR, NO. 14 AWG	
			96	131	372	443	463		415	419	386	446	382	93	118	1346			5110		632	40700	5110	LF	SIGNAL CABLE, 7 CONDUCTOR, NO. 14 AWG	
	1752					136	345	1216	342	326	193		175	324					4809		632	53202	4809	LF	INTERCONNECT CABLE, 6 PAIR, NO. 19 AWG, SOLID, REA (PE-39)	
	7694	275	355	672	425	230					142	325			370	362	362	325	11537		632	62803	11537	LF	INTERCONNECT CABLE, INTEGRAL MESSENGER WIRE TYPE, 6 PAIR, NO. 19 AWG, SOLID, REA (PE-38), AS PER PLAN	3
																1			1		632	63001	1	EACH	PHONE DROP, AS PER PLAN	3
		4	2	4	4	4	3	4	4	4	4	4	2	4	2	4	2	3	58		632	64010	58	EACH	SIGNAL SUPPORT FOUNDATION	
			2	3			1						2		2		2		12		632	64020	12	EACH	PEDESTAL FOUNDATION	
		364	197	155	200	458	175		187	122	164	360	165	145	212	583	50	241	3778		632	65200	3778	LF	LOOP DETECTOR LEAD-IN CABLE	
		10	30	118	133	100	10	32	10	10	20	20	95	122	97	4	15	75	901		632	68200	901	LF	POWER CABLE, 2 CONDUCTOR, NO. 6 AWG	
		1	1	1	1	1	1	1	1	1	1	1	1	1	1	1	1	1	17		632	70001	17	EACH	POWER SERVICE, AS PER PLAN	3
				1														1	2		632	70400	2	EACH	CONDUIT RISER, 2 IN. DIAMETER	
			1												1				2		632	75001	2	EACH	SIGNAL SUPPORT, TYPE TC-812.0 DESIGN 3 POLE, WITH MAST ARMS TC-81.20 DESIGN 1 AND DESIGN 1, AS PER PLAN	3
																	1		1		632	75011	1	EACH	SIGNAL SUPPORT, TYPE TC-81.20 DESIGN 3 POLE, WITH MAST ARMS TC-81.20 DESIGN 2 AND DESIGN 1, AS PER PLAN	3
			1																1		632	75031	1	EACH	SIGNAL SUPPORT, TYPE TC-81.20 DESIGN 4 POLE, WITH MAST ARMS TC-81.20 DESIGN 3 AND DESIGN 1, AS PER PLAN	3
													1						1		632	75051	1	EACH	SIGNAL SUPPORT, TYPE TC-81.20 DESIGN 4 POLE, WITH MAST ARMS TC-81.20 DESIGN3AND DESIGN 3, AS PER PLAN	3
							1												1		632	75111	1	EACH	SIGNAL SUPPORT, TYPE-81.20 DESIGN 12 POLE, WITH MAST ARMS TC-81.20 DESIGN 3 AND DESIGN 11, AS PER PLAN	3
													1						1		632	77051	1	EACH	COMBINATION SIGNAL SUPPORT, TYPE TC-81.20 DESIGN 4 POLE, WITH MAST ARMS TC-81.20 DESIGN 3 AND DESIGN 3, AS PER PLAN	3
		2		1	2	1	1							2	1			1	11		632	80101	11	EACH	SIGNAL SUPPORT, TYPE TC-81.20 DESIGN 1, AS PER PLAN	3
		1		2		1	1	4	2	2	2	1		1				2	19		632	80201	19	EACH	SIGNAL SUPPORT, TYPE TC-81.20, DESIGN 2, AS PER PLAN	3
					1							1				2	1		5		632	80301	5	EACH	SIGNAL SUPPORT, TYPE TC-81.20, DESIGN 3, AS PER PLAN	3
		1				1					1	1				2			6		632	80501	6	EACH	SIGNAL SUPPORT, TYPE TC-81.20, DESIGN 11, AS PER PLAN	3
									2		1								3		632	81101	3	EACH	COMBINATION SIGNAL SUPPORT, TYPE TC-81.20, DESIGN 1, AS PER PLAN	3
				1						2		1		1					5		632	81201	5	EACH	COMBINATION SIGNAL SUPPORT, TYPE TC-81.20, DESIGN 2, AS PER PLAN	3
					1	1													2		632	81301	2	EACH	COMBINATION SIGNAL SUPPORT, TYPE TC-81.20, DESIGN 3, AS PER PLAN	3
								8											8		632	84301	8	EACH	COMBINATION STRAIN POLE, TYPE TC-81.20, DESIGN 3, AS PER PLAN	3
	1	1		1														1	4		632	89400	4	EACH	DOWN GUY	
			2	3			1						2		2		2		12		632	89611	12	EACH	PEDESTAL, 9', AS PER PLAN	3
		1	1	1	1	1	1	1	1	1	1	1	1	1	1	1	1	1	17		632	90101	17	EACH	REMOVAL OF TRAFFIC SIGNAL INSTALLATION, AS PER PLAN	3

CALCULATED:
CHECKED:

GENERAL SUMMARY

CHP-36-14.23
PID NO. 20258

7
50

P:\98240002\DWG\signal\9802IC00_DWG.dwg - OCT 20, 1999 - 14:27:55

SHEET NUMBER																			PARTICIPATION		ITEM	EXT.	QTY.	UNITS	* ITEM ** CONTROLLER ITEM	SEE SHEET
2	15	17	19	21	23	25	27	30	32	34	36	38	40	42	44	46	48	50	CITY, STATE & FEDERAL	100% CITY						
		1	1	1	1	1	1	1	1	1	1	1	1	1	1	1	1	1	17		633	38001	17	EACH	CONTROLLER, ACTUATED, 8 PHASE, SOLID STATE DIGITAL MICROPROCESSOR, AS PER PLAN	4
																1			1		633	39001	1	EACH	CONTROLLER, MASTER, TRAFFIC RESPONSIVE, AS PER PLAN	6
																			1		633	40501	1	EACH	CENTRAL OFFICE MONITOR, AS PER PLAN	3
								0.94								1.83			2.77		633	70000	2.77	CY	CONCRETE FOR CABINET FOUNDATION	
		8.6	8.6	8.6	8.6										8.6	11.2	8.6	8.6	71.4		633	70500	71.4	SF	CONTROLLER WORK PAD	
		1	1	1	1	1	1	1	1	1	1	1	1	1	1	1	1	1	17		633	99000	17	EACH	CONTROLLER,*MISC.: PREEMPTION, AS PER PLAN	5
																			1		633	99300	1	LUMP	CONTROLLER,*MISC.: PREEMPTION, AS PER PLAN	5
		0.015	0.019			0.027			0.02			0.034	0.038	0.038	0.019	0.035	0.038		0.283		642	00302	0.283	MILE	CENTER LINE, TYPE 2	
		80				80		120				80	80		60	246	56		802		642	00402	802	LF	CHANNELIZING LINE, TYPE 2	
			231	244	315	384	427		393	394	353	460							3201		642	00602	3201	LF	CROSSWALK LINE, TYPE 2	
		30				140												20	190		642	30000	190	LF	REMOVAL OF PAVEMENT MARKING	
		55	26	34	26	42	36	116	40	42	32	45	75	70	60	135	35	26	895		644	00500	895	LF	STOP LINE	
													285	107	98	495	245		1230		644	00600	1230	LF	CROSSWALK LINE	
		2						4				1				2			9		644	01300	9	EACH	LANE ARROW	
						1						1				2			4		644	01400	4	EACH	WORD ON PAVEMENT, 72"	
								240		21	12	24	282	45	62	60	30	26	802		644	30000	802	LF	REMOVAL OF PAVEMENT MARKING	
								4											4		644	30020	4	EACH	REMOVAL OF PAVEMENT MARKING	
								148													830	26000	148	LF	CURB, TYPE 6	
																			1		614	11000	1	LUMP	MAINTAINING TRAFFIC	
																			1		623	10000	1	LUMP	CONSTRUCTION LAYOUT STAKES	
																			1		624	10000	1	LUMP	MOBILIZATION	
																			6		806	16000	6	MNTH	FIELD OFFICE, TYPE A	
		1	1	1	1	1	1	1	1	1	1	1	1	1	1	1	1	1	17		633	99000	17	EACH	ALTERNATE BID: CONTROLLER*MISC.: PREEMPTION, AS PER PLAN	5
																			1		633	99300	1	LUMP	ALTERNATE BID:**MISC.: PREEMPTION, AS PER PLAN	5

CALCULATED:
CHECKED:

GENERAL SUMMARY

CHP-36-14.23
PID NO. 20258

8
50

P:\98240002\DWG\signal\9802IC00.DWG.dwg – OCT 20, 1999 – 14:27:55

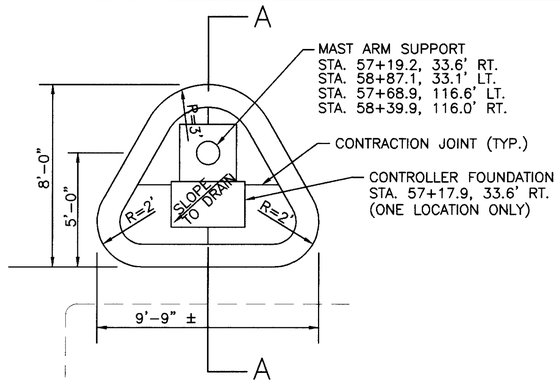

MAST ARM ISLAND

NOT TO SCALE

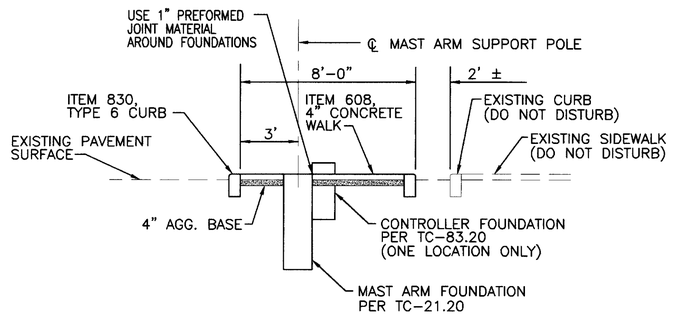

SECTION A–A

NOT TO SCALE

TYPE TC–81.20 SIGNAL SUPPORT

NOT TO SCALE

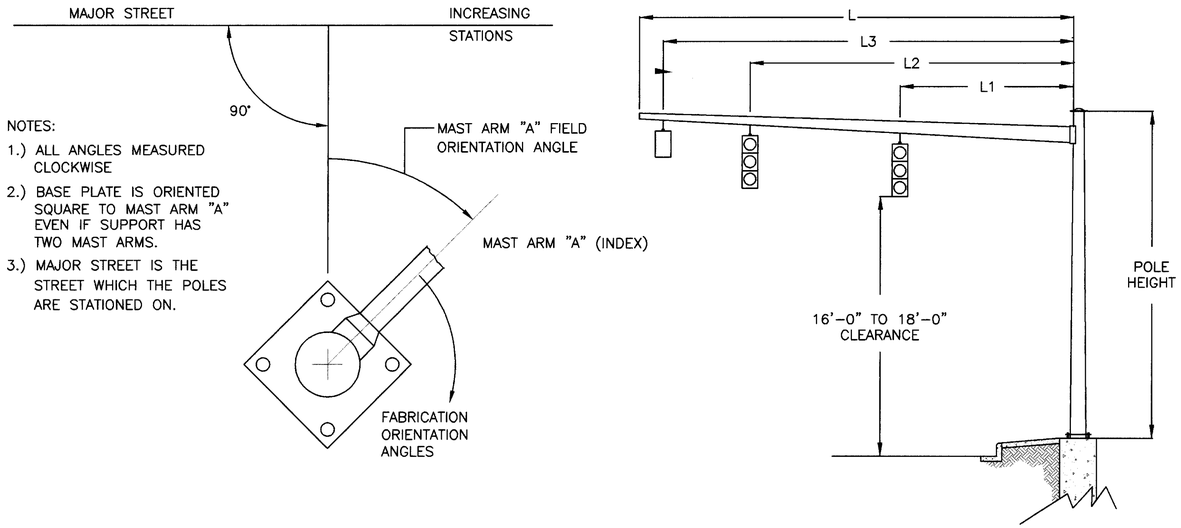

NOTES:

1.) ALL ANGLES MEASURED CLOCKWISE
2.) BASE PLATE IS ORIENTED SQUARE TO MAST ARM "A" EVEN IF SUPPORT HAS TWO MAST ARMS.
3.) MAJOR STREET IS THE STREET WHICH THE POLES ARE STATIONED ON.

LEGEND

—— W ——	WATER LINE
—— G ——	GAS LINE
—— STM ——	STORM SEWER
—— SAN ——	SANITARY SEWER
—— T ——	UNDERGROUND TELEPHONE CABLE
—— OHE ——	OVERHEAD ELECTRIC CABLE
2" ——	CONDUIT
⊗W.V.	WATER VALVE
⊗G.V.	GAS VALVE
⊙	EXISTING STRAIN POLE
-⊙-	ULITITY POLE
CB	STORM SEWER CATCH BASIN
	FIRE HYDRANT
⊠EX.	EXISTING CONTROLLER
□EX.	EXISTING HANDHOLE
	EXISTING 3 SECTION SIGNAL HEAD
	EXISTING 5 SECTION SIGNAL HEAD
	GROUND MOUNTED SIGN
	LANE ARROW, THERMOPLASTIC
ONLY	WORD ON PAVEMENT, "ONLY", THERMOPLASTIC
Ⓓ	CENTER LINE, TYPE 2 TRAFFIC PAINT
Ⓒ	CHANNELIZING LINE, TYPE 2 TRAFFIC PAINT
Ⓦ	CROSSWALK, THERMOPLASTIC
	STOP LINE, THERMOPLASTIC
	MAST ARM SUPPORT POLE
	EMERGENCY PREEMPTION VEHICLE DETECTOR, ONE–WAY
	EMERGENCY PREEMPTION VEHICLE DETECTOR, TWO–WAY
	CONTROLLER CABINET AND WORK PAD
	OVERHEAD SIGN
	STRAIN POLE
	PULL BOX
	PEDESTRAIN SIGNAL HEAD, TYPE A2
	PEDESTRAIN SIGNAL HEAD, TYPE A2, WITH PUSH BUTTON AND R–73A SIGN, 9"x12"
	3 SECTION SIGNAL HEAD
	5 SECTION SIGNAL HEAD
	LIGHT POLE

TYPE TC–81.10 STRAIN POLE

NOT TO SCALE

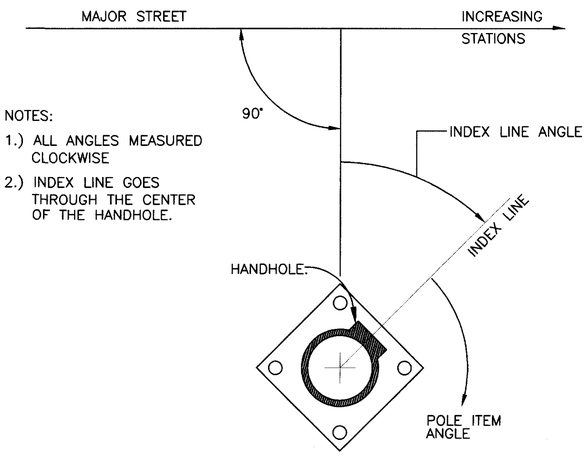

NOTES:

1.) ALL ANGLES MEASURED CLOCKWISE
2.) INDEX LINE GOES THROUGH THE CENTER OF THE HANDHOLE.

CALCULATED:
CHECKED:

LEGEND AND MISCELLANEOUS DETAILS

CHP-36-14.23
PID NO. 20258

P:\98240002\DWG\signal\INDEX.DWG - NOV 18, 1999 - 20:38:11

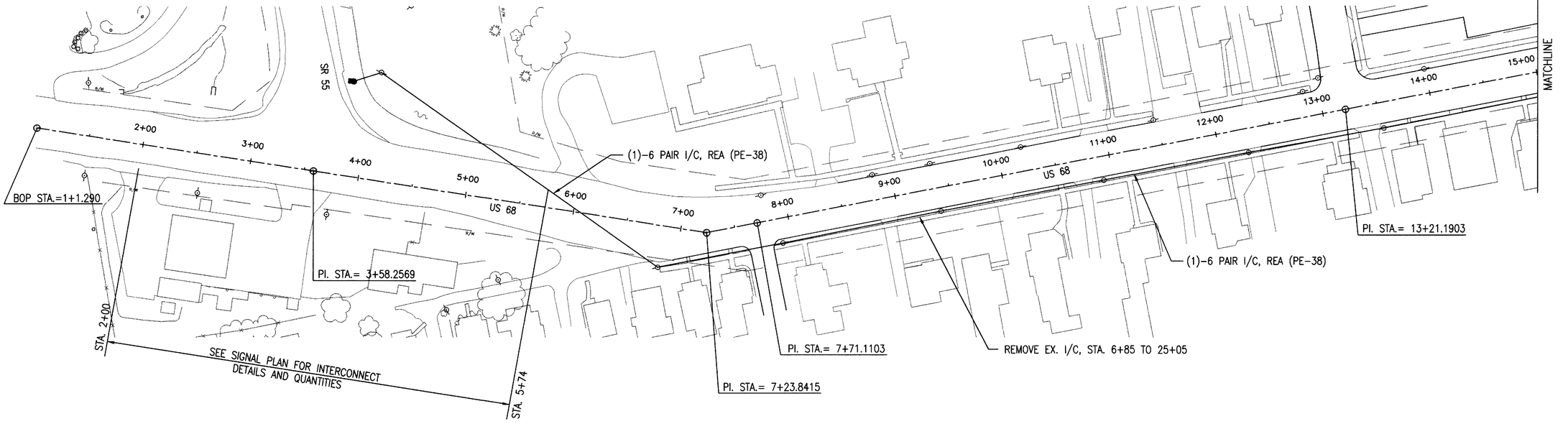

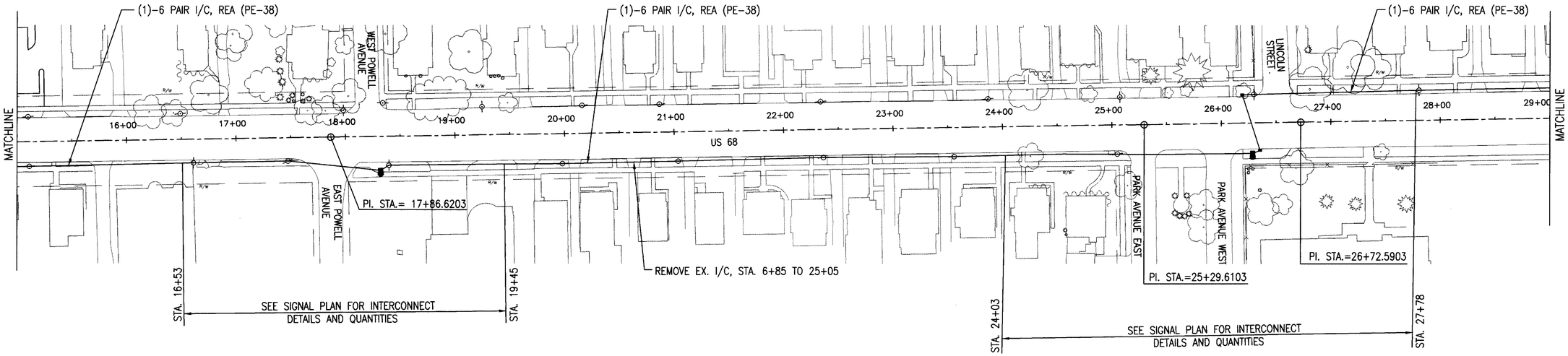

HORIZONTAL SCALE IN FEET
0 20 20

CALCULATED: --
CHECKED: --

TRAFFIC SIGNAL INTERCONNECT PLAN

CHP-36-14.23
PID NO. 20258

10
50

P:\98240002\RCP01001.DWG.dwg - NOV 18, 1999 - 18:26:47

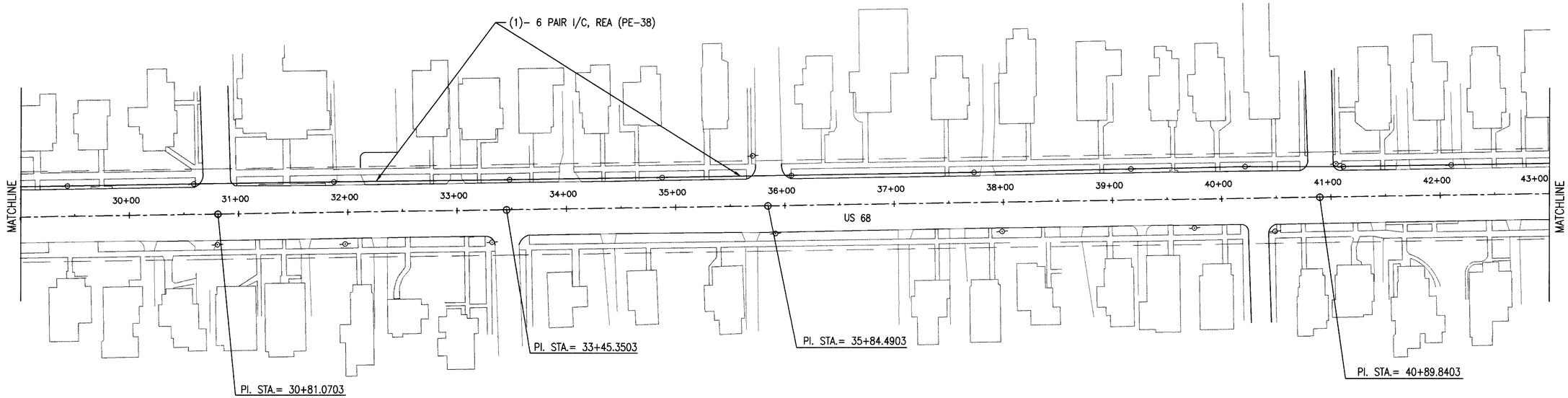

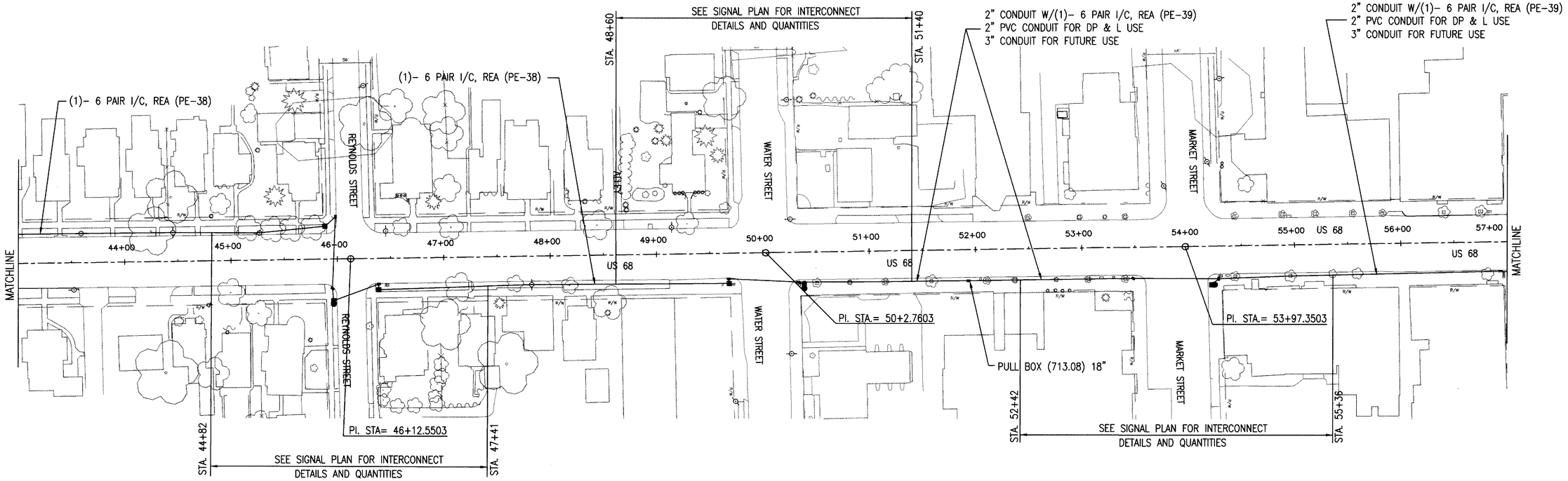

HORIZONTAL SCALE IN FEET
50 0 50

CALCULATED: --
CHECKED: --

TRAFFIC SIGNAL INTERCONNECT PLAN

CHP-36-14.23
PID NO. 20258

11
50

P:\98240002\RCP03001.DWG.dwg – NOV 18, 1999 – 18:24:26

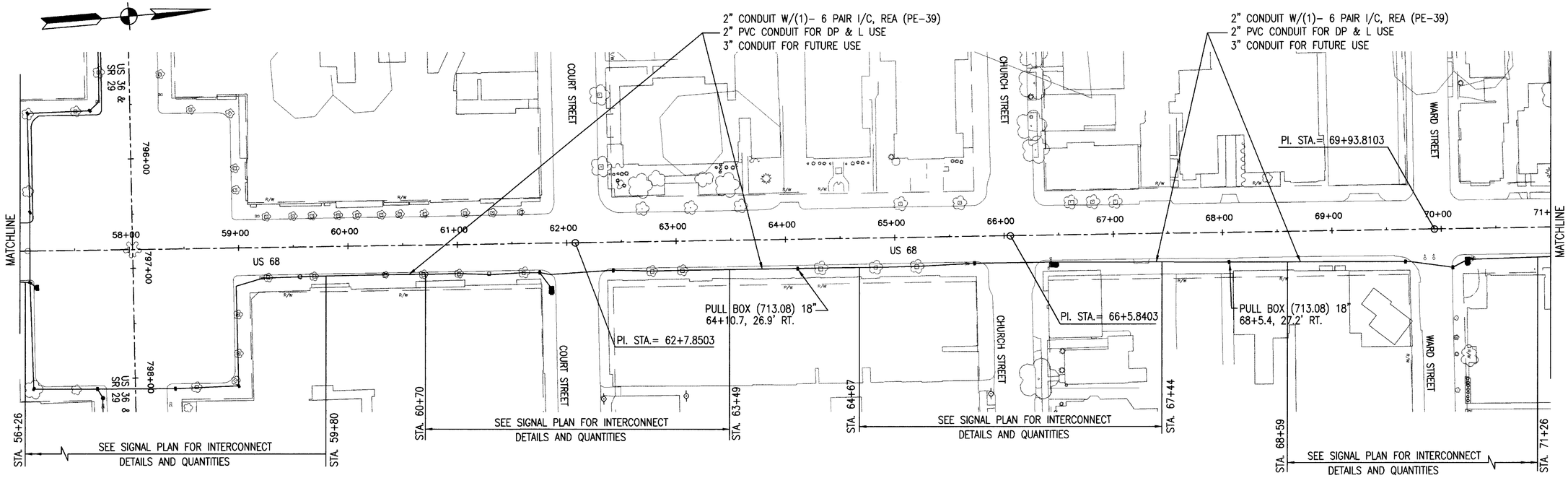

HORIZONTAL SCALE IN FEET
50 0 50

CALCULATED: --
CHECKED: --

TRAFFIC SIGNAL INTERCONNECT PLAN

CHP-36-14.23
PID NO. 20258

12
50

P:\98240002\RCP05001.DWG.dwg -- NOV 18, 1999 -- 18:17:53

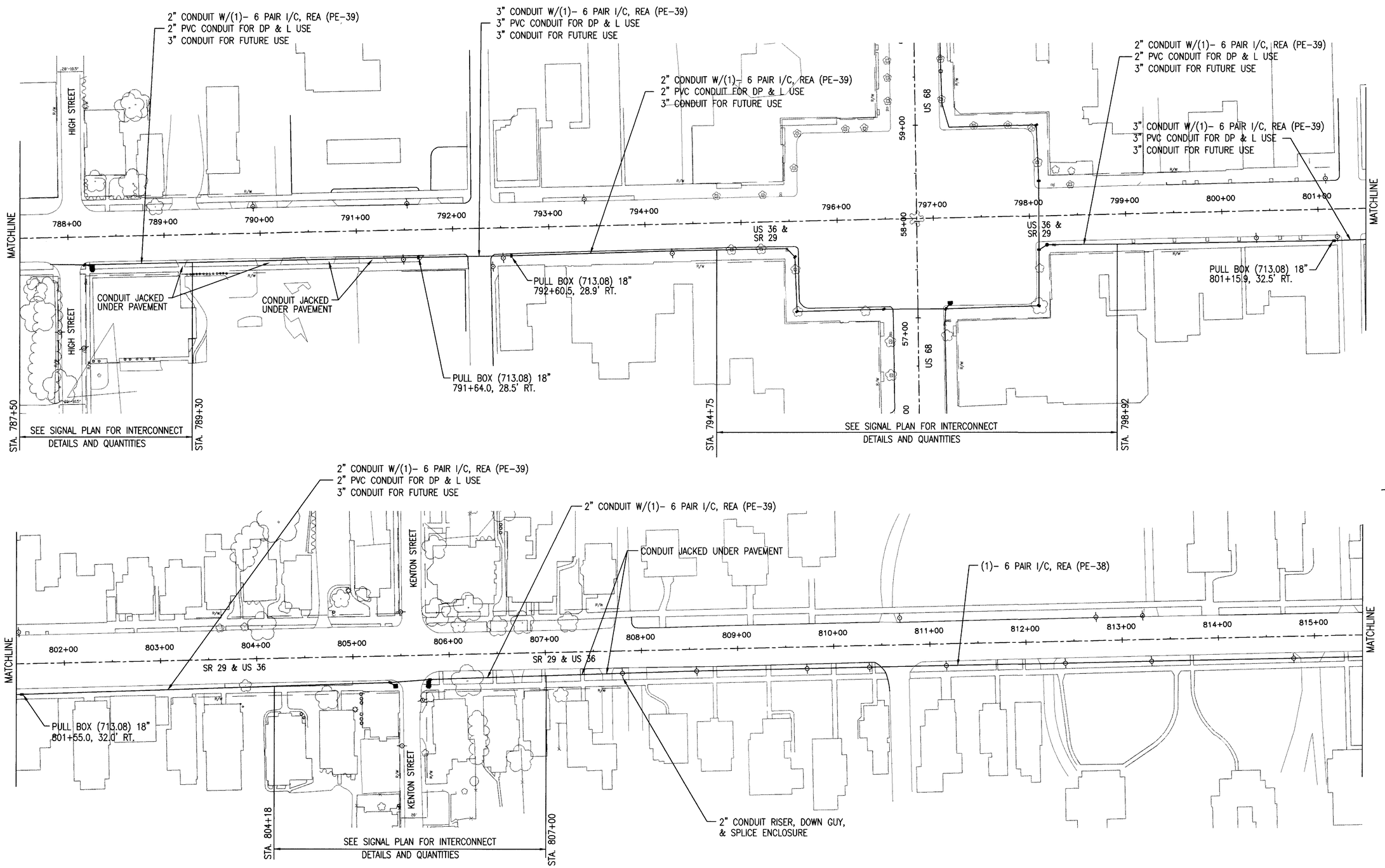

HORIZONTAL SCALE IN FEET
50 0 50

CALCULATED: --
CHECKED: --

TRAFFIC SIGNAL INTERCONNECT PLAN

CHP-36-14.23
PID NO. 20258

13
50

P:\98240002\RCP03002.DWG.dwg — NOV 18, 1999 — 18:45:50

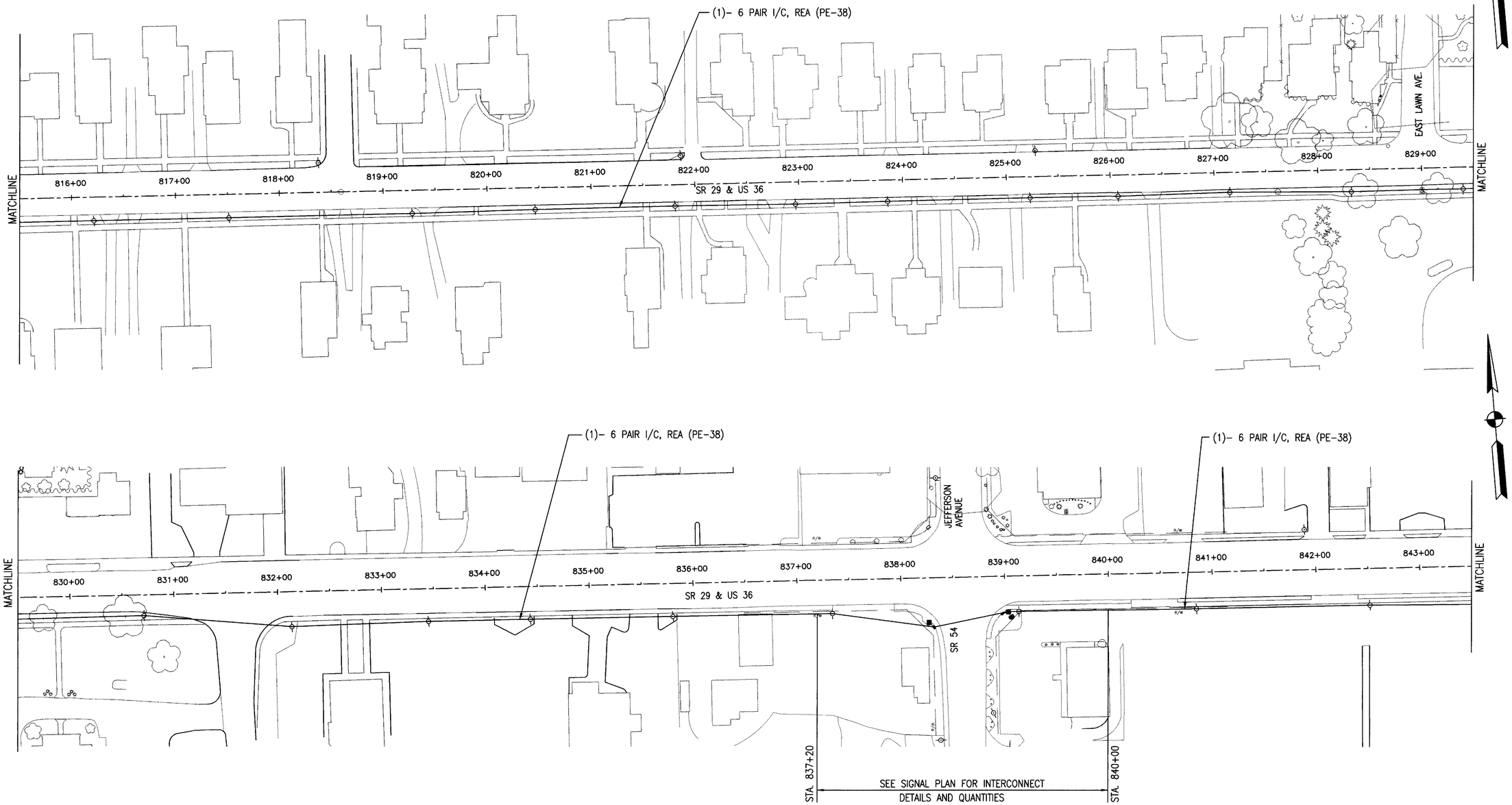

CALCULATED: --
CHECKED: --

HORIZONTAL SCALE IN FEET
50 0 50

TRAFFIC SIGNAL INTERCONNECT PLAN

CHP-36-14.23
PID NO. 20258

14
50

P:\98240002\RCP05002.DWG.dwg - NOV 18, 1999 - 11:23:42

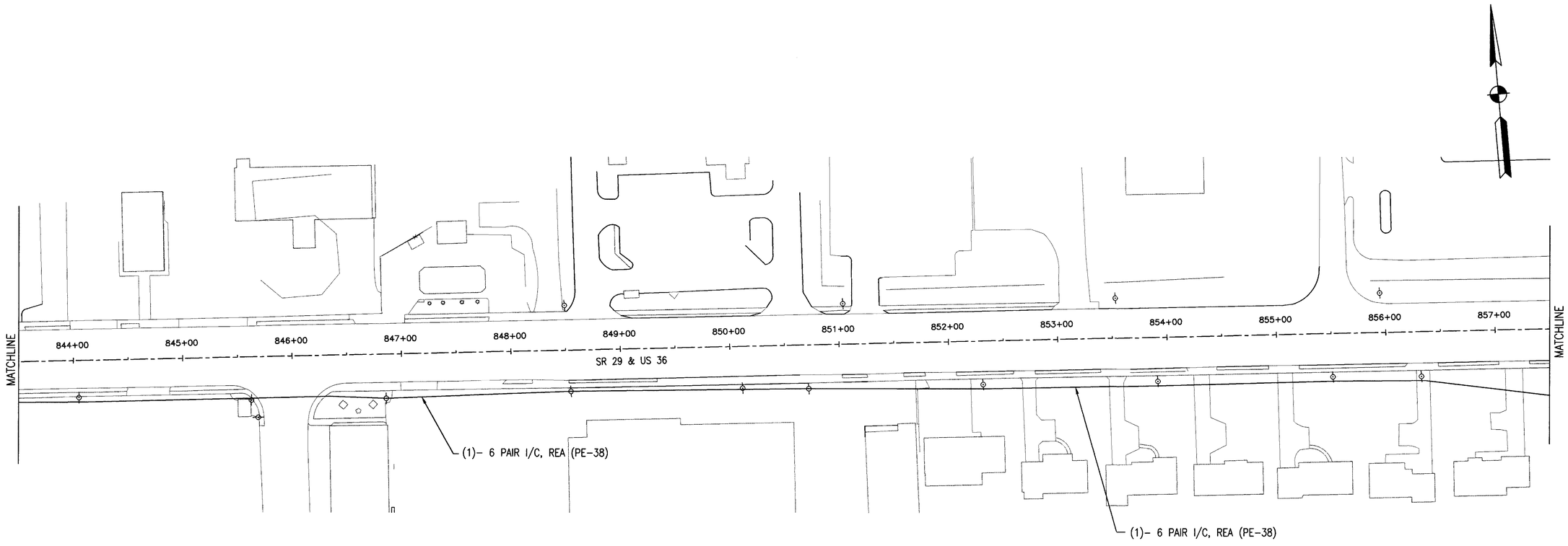

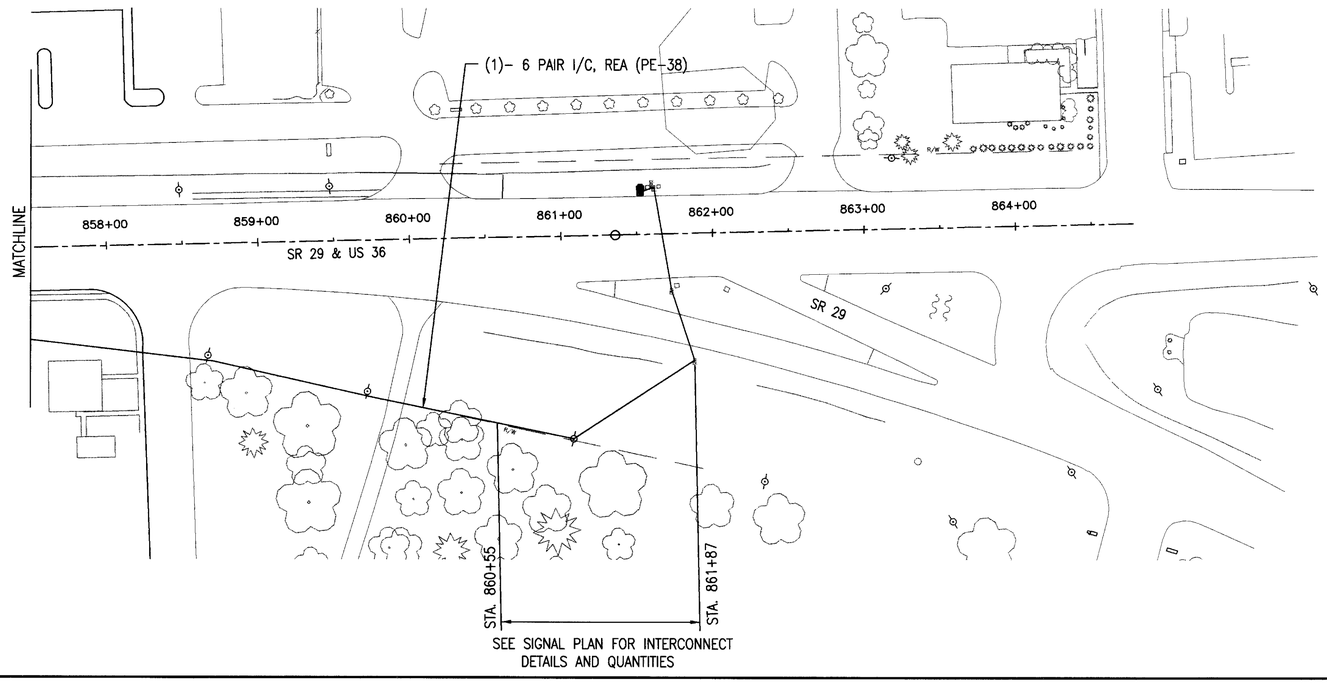

INTERCONNECT QUANTITIES				
ITEM	EXT.	QTY.	UNITS	DESCRIPTION
625	25400	1752	LF	CONDUIT, 2", 713.04
625	25402	1672	LF	CONDUIT, 2", 713.07
625	25500	1742	LF	CONDUIT, 3", 713.04
625	25900	97	LF	CONDUIT, JACKED OR DRILLED, 2"
625	29000	320	LF	TRENCH
625	29501	1354	LF	TRENCH IN PAVED AREA, TYPE A, AS PER PLAN
625	29601	45	LF	TRENCH IN PAVED AREA, TYPE B
625	30700	7	EACH	PULL BOX, 713.08, 18"
632	53202	1752	LF	INTERCONNECT CABLE, 6 PAIR, NO. 19 AWG, SOLID, REA (PE-39)
632	62803	7694	LF	INTERCONNECT CABLE, INTEGRAL MESSENGER WIRE TYPE, 6 PAIR, NO. 19 AWG, SOLID REA (PE-38), AS PER PLAN
632	70400	1	EACH	CONDUIT RISER, 2 IN. DIAMETER
632	89400	1	EACH	DOWNGUY

P:\98240002\RCP07002.DWG\RCP07002.DWG.dwg - NOV 19, 1999 - 05:54:33

50 0 50
HORIZONTAL
SCALE IN FEET

CALCULATED: --
CHECKED: --

TRAFFIC SIGNAL INTERCONNECT PLAN

CHP-36-14.23
PID NO. 20258

15
50

PHASE DIAGRAM

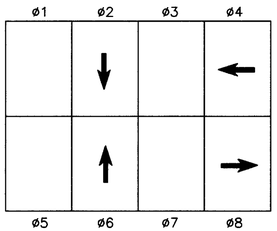

SIGNAL INDICATIONS

H1,H2,H3,H4,
H5,H6,H7,H8,H9

ALL INDICATIONS ARE 12"

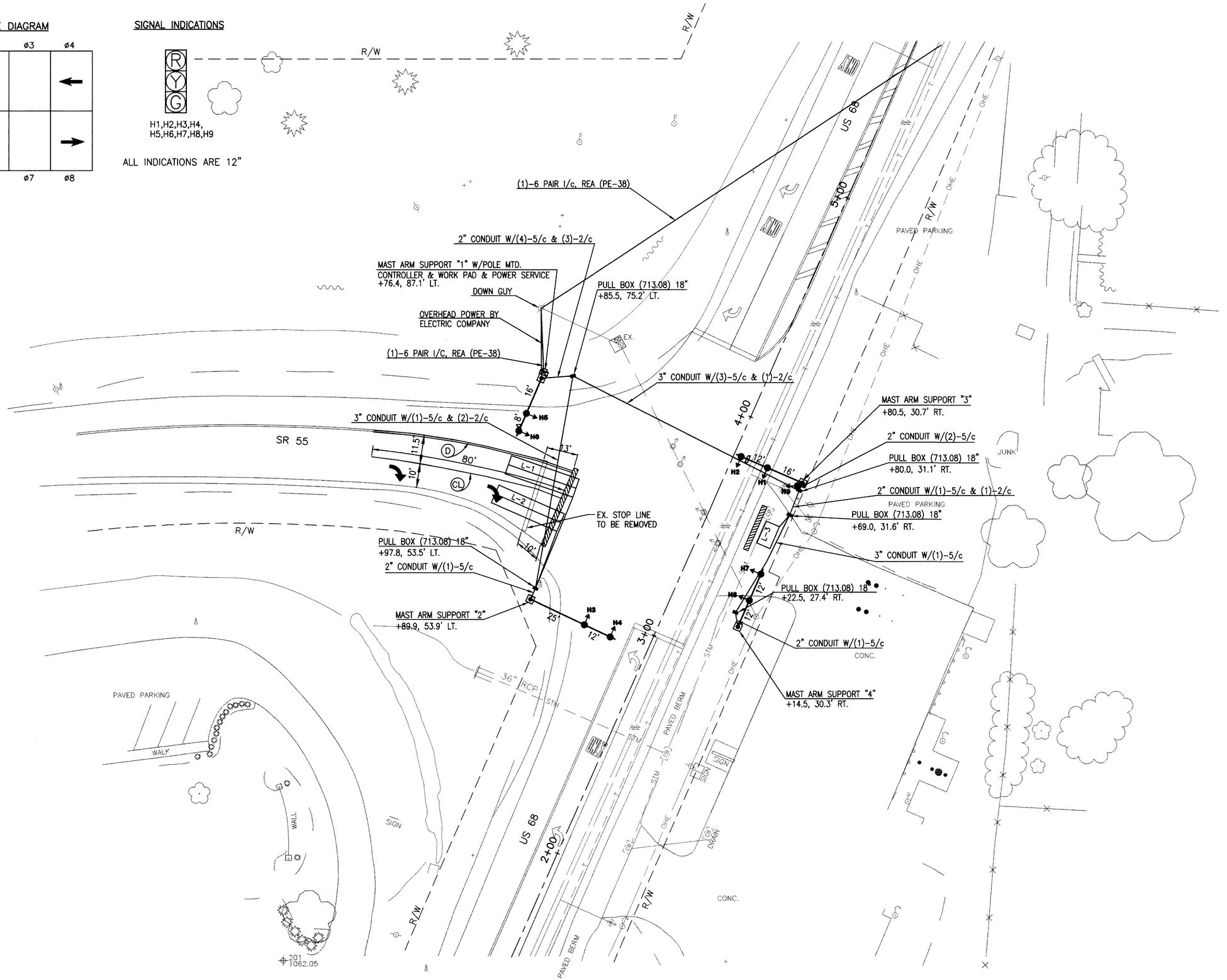

HORIZONTAL SCALE IN FEET
20 0 20

CALCULATED: --
CHECKED: --

US 68 AND SR 55
TRAFFIC SIGNAL INDICATIONS

CHP-36-14.23
PID NO. 20258

16
50

P:\98240002\DWG\signal\9802SG07.DWG.dwg - NOV 18, 1999 - 18:11:17

DETECTOR ASSIGNMENTS

LOOP	SIZE	TURNS	MODE	MEMORY	(E)XTEND/(D)ELAY (SEC.)	UNIT	CHANNEL	PHASE
L-1	8' x 30'	2-4-2	PRESENCE	NON-LOCK	D-5	1	1	8
L-2	8' x 30'	2-4-2	PRESENCE	NON-LOCK	D-5	1	2	8
L-3	10' x 8'	3	PRESENCE	NON-LOCK	D-5	2	1	4

NOTES:
LOOPS L-1 & L-2 ARE QUADROPOLE

REMOVAL OF TRAFFIC SIGNAL INSTALLATION

DESCRIPTION OF ITEM TO BE REMOVED BY CONTRACTOR	REMOVE AND SALVAGE	REMOVE AND DISPOSE
VEHICULAR SIGNAL HEADS (6)-3 SECTION, 1-WAY	X	
POLE MOUNTED CONTROL CABINET AND CONTROLLER	X	
(2) STRAIN POLES	X	
CABLE & WIRE		X
CONTROLLER WORK PAD		X

TRAFFIC CONTROL QUANTITIES

ITEM	EXT.	QTY.	UNITS	DESCRIPTION
625	25400	39	LF	CONDUIT, 2", 713.04
625	25500	250	LF	CONDUIT, 3", 713.04
625	29000	61	LF	TRENCH
625	29601	212	LF	TRENCH IN PAVED AREA, TYPE B
625	30700	5	EACH	PULL BOX, 713.08, 18"
625	32000	4	EACH	GROUND ROD
632	00300	9	EACH	VEHICULAR SIGNAL HEAD, 3 SECTION, 12" LENS, 1-WAY
632	25000	9	EACH	COVERING OF VEHICULAR SIGNAL HEAD
632	26500	3	EACH	DETECTOR LOOP
632	27105	2	EACH	LOOP DETECTOR UNIT, 2 CHANNEL, DELAY AND EXTENSION TYPE, AS PER PLAN
632	40500	815	LF	SIGNAL CABLE, 5 CONDUCTOR, NO. 14 AWG
632	62803	275	LF	INTERCONNECT CABLE, INTEGRAL MESSENGER WIRE TYPE, 6 PAIR, NO. 19 AWG, SOLID, REA (PE-38), AS PER PLAN
632	64010	4	EACH	SIGNAL SUPPORT FOUNDATION
632	65200	364	LF	LOOP DETECTOR LEAD-IN CABLE
632	68200	10	LF	POWER CABLE, 2 CONDUCTOR, NO. 6 AWG
632	70001	1	EACH	POWER SERVICE, AS PER PLAN
632	80101	2	EACH	SIGNAL SUPPORT, TYPE TC-81.20, DESIGN 1, AS PER PLAN
632	80201	1	EACH	SIGNAL SUPPORT, TYPE TC-81.20, DESIGN 2, AS PER PLAN
632	80501	1	EACH	SIGNAL SUPPORT, TYPE TC-81.20, DESIGN 11, AS PER PLAN
632	98400	1	EACH	DOWNGUY
632	90101	1	EACH	REMOVAL OF TRAFFIC SIGNAL INSTALLATION, AS PER PLAN
633	38001	1	EACH	CONTROLLER, ACTUATED, 8 PHASE, SOLID STATE DIGITAL MICROPROCESSOR, AS PER PLAN
633	70500	8.6	SF	CONTROLLER WORK PAD
633	99000	1	EACH	CONTROLLER, MISC.: PREEMPTION, AS PER PLAN
642	00302	0.015	MILE	CENTER LINE, TYPE 2
642	00402	80	LF	CHANNELIZING LINE, TYPE 2
642	30000	30	LF	REMOVAL OF PAVEMENT MARKING
644	00500	55	LF	STOP LINE
644	01300	2	EACH	LANE ARROW
633	99000	1	EACH	ALTERNATE BID: CONTROLLER, MISC.: PREEMPTION, AS PER PLAN

TIMING

PHASE	ø2	ø4	ø6	ø8
MOVEMENT	SB	WB	NB	EB
MIN. GREEN	20	10	20	10
VEHICLE EXTENSION	–	2.0	–	2.0
MAX 1	52	25	52	25
MAX 2	–	–	–	–
YELLOW	3.5	3.5	3.5	3.5
ALL RED	1	1.0	1	1.0
WALK	–	–	–	–
PED. CLEAR	–	–	–	–
RECALL	MIN	–	MIN	–
CALL TO NON-ACTUATED	1	–	1	–

COORDINATION TIMING (SECONDS)

CYCLE/OFFSET	PHASE ø2	ø4	ø6	ø8	DESCRIPTION
60/2	35	25	35	25	12AM-6AM, 7 DAYS
75/49	52	23	52	23	6AM-10:30AM, M-F
75/52	52	23	52	23	10:30AM-7PM, M-F
70/31	45	25	45	25	7PM-12AM M-F 6AM-12AM, SA & SU

NOTES:
1. OFFSETS REFERENCED TO BEGINNING OF ø2 & ø6
2. øC, ø4, ø6, & ø8 TO BE PROGRAMMED FOR DUAL ENTRY.

SIGNAL DISPLAY SCHEDULE

PHASE / SIGNAL	ø2 & ø6 R/W	ø2 & ø6 CLEARANCE		ø4 & ø8 R/W	ø4 & ø8 CLEARANCE		FLASH	PREEMPTION CALL SB R/W	PREEMPTION CALL SB CLEARANCE		PREEMPTION CALL WB R/W	PREEMPTION CALL WB CLEARANCE		PREEMPTION CALL NB R/W	PREEMPTION CALL NB CLEARANCE		PREEMPTION CALL EB R/W	PREEMPTION CALL EB CLEARANCE	
H1,H2	G	Y	R	R	R	R	Y	R	R	R	R	R	R	G	Y	R	R	R	R
H3,H4	G	Y	R	R	R	R	Y	G	Y	R	R	R	R	R	R	R	R	R	R
H5,H6	R	R	R	G	Y	R	R	R	R	R	G	Y	R	R	R	R	R	R	R
H7,H8,H9	R	R	R	G	Y	R	R	R	R	R	R	R	R	R	R	R	G	Y	R
–	–	–	–	–	–	–	–	–	–	–	–	–	–	–	–	–	–	–	–
–	–	–	–	–	–	–	–	–	–	–	–	–	–	–	–	–	–	–	–

POLE ORIENTATION DATA CHART

SUPPORT NO.	POLE DESIGN NO.	MAST ARM DESIGN NO.	STATION & OFFSET	POLE HEIGHT (ft.)	PED SIGNALS	PED BUTTONS	HANDHOLE	CABLE ENTRANCE	POWER SERVICE	MAST ARM A ANGLE (DEG.)	MAST ARM B ANGLE (DEG.)	L (ft)	L1 (ft)	L2 (ft)	L3 (ft)	AUXILLARY HEAD ANGLE (DEG.)	CONTROLLER
MAST ARM 1	1	1	3+76.4, 87.1' LT.	23	–	–	180	180	90	90	–	25	16	24	–		180
MAST ARM 2	11	11	2+89.9, 53.9' LT.	23	–	–	180	–	–	0	–	38	25	37	–		–
MAST ARM 3	2	2	3+80.5, 30.7' RT.	23	–	–	180	–	–	0	–	29	16	28	–	75	–
MAST ARM 4	1	1	3+14.5, 30.3' RT.	23	–	–	90	–	–	90	–	25	12	24	–		–

WIRING DIAGRAM

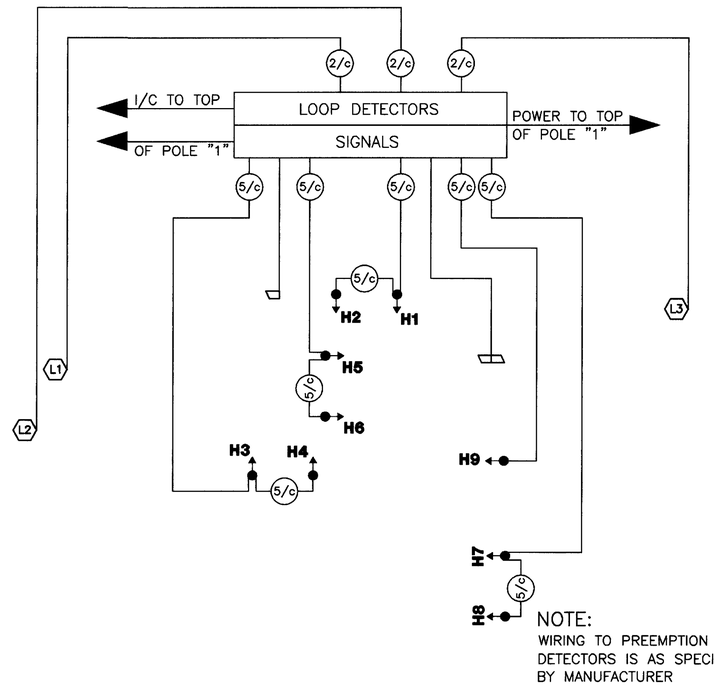

NOTE:
WIRING TO PREEMPTION DETECTORS IS AS SPECIFIED BY MANUFACTURER

CALCULATED: - -
CHECKED: - -

US 68 AND SR 55
TRAFFIC SIGNAL PLAN

CHP-36-14.23
PID NO. 20258

17
50

P:\98240002\DWG\signal\9802TB07.DWG.dwg - NOV 18, 1999 - 18:15:27

PHASE DIAGRAM

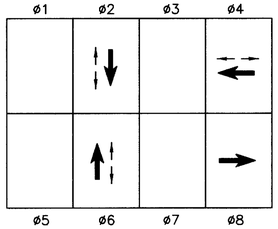

SIGNAL INDICATIONS

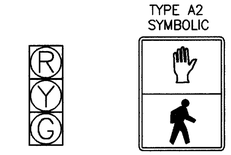

H1,H2,H3,H4,
H5,H6,H7,H8

P1,P2,P3,
P4,P5,P6

ALL INDICATIONS ARE 12"

(R-73A)

MOUNT ABOVE
ALL PUSHBUTTONS

(R-27A-30)

MOUNT ON MAST ARM "2A"

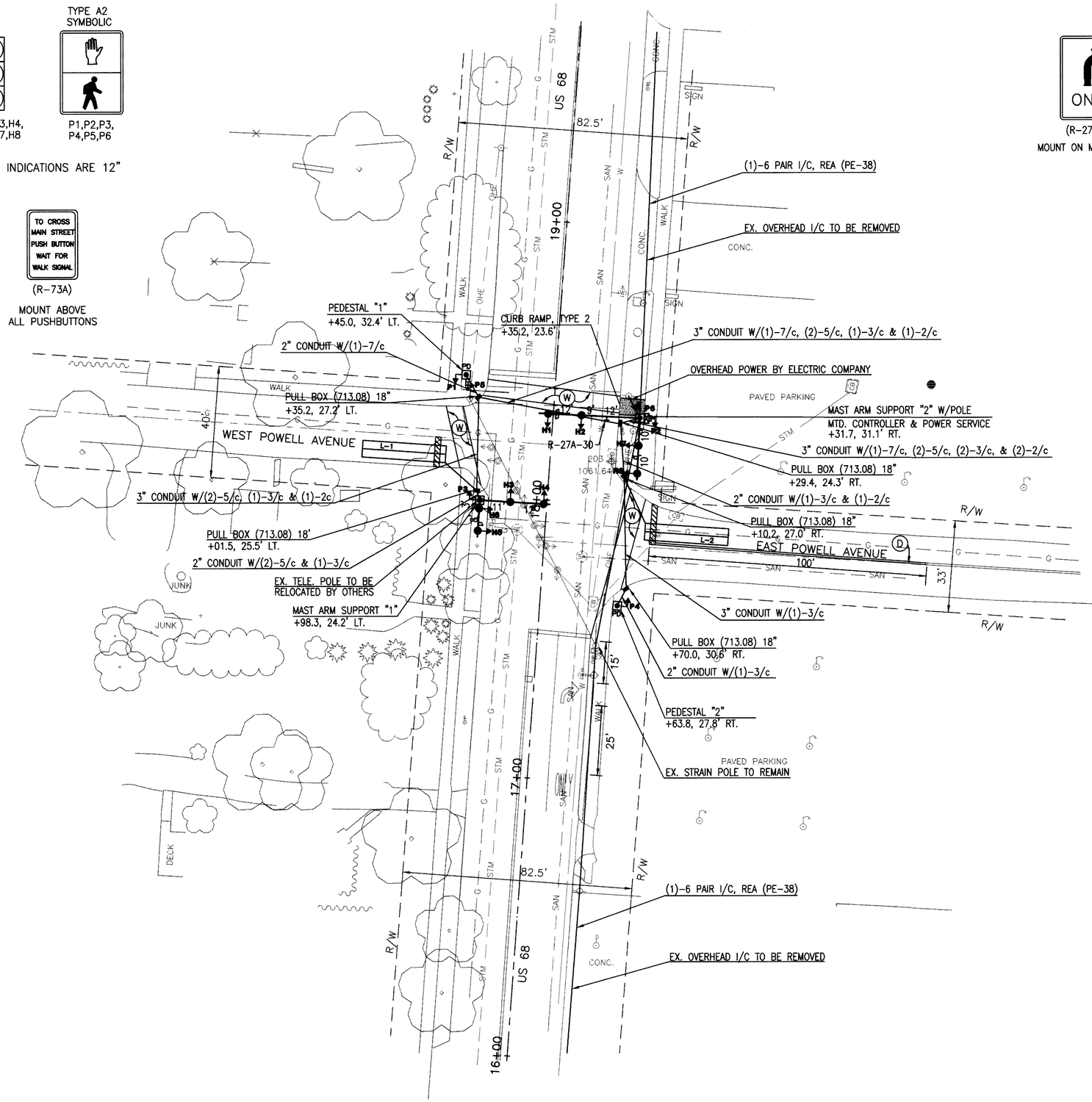

CALCULATED: --
CHECKED: --

HORIZONTAL
SCALE IN FEET
20 0 20

US 68 AND POWELL AVENUE
TRAFFIC SIGNAL PLAN

CHP-36-14.23
PID NO. 20258

18
50

P:\98240002\DWG\signal\9802SG08.DWG - NOV 18, 1999 - 19:44:38

DETECTOR ASSIGNMENTS

LOOP	SIZE	TURNS	MODE	MEMORY	(E)XTEND/(D)ELAY (SEC.)	UNIT	CHANNEL	PHASE
L–1	6' x 30'	2–4–2	PRESENCE	NON–LOCK	D–5	1	1	8
L–2	6' x 30'	2–4–2	PRESENCE	NON–LOCK	D–5	1	2	4

NOTES:
ALL LOOPS ARE QUADROPOLE

REMOVAL OF TRAFFIC SIGNAL INSTALLATION

DESCRIPTION OF ITEM TO BE REMOVED BY CONTRACTOR	REMOVE AND SALVAGE	REMOVE AND DISPOSE
VEHICULAR SIGNAL HEADS (8)–3 SECTION, 1–WAY	X	
POLE MOUNTED CONTROL CABINET AND CONTROLLER	X	
CABLE & WIRE		X

TRAFFIC CONTROL QUANTITIES

ITEM	EXT.	QTY.	UNITS	DESCRIPTION
608	10000	20	SF	4" CONCRETE WALK
608	51000	1	EACH	CURB RAMP, TYPE 2
625	25400	39	LF	CONDUIT, 2", 713.04
625	25500	134	LF	CONDUIT, 3", 713.04
625	29501	9	LF	TRENCH IN PAVED AREA, TYPE A, AS PER PLAN
625	29601	126	LF	TRENCH IN PAVED AREA, TYPE B
625	30700	5	EACH	PULL BOX, 713.08, 18"
625	32000	4	EACH	GROUND ROD
630	79100	1	EACH	SIGN HANGER ASSEMBLY, MAST ARM
630	79500	2	EACH	SIGN SUPPORT ASSEMBLY, POLE MOUNTED
630	80100	7.5	SF	SIGN, FLAT SHEET
632	00300	8	EACH	VEHICULAR SIGNAL HEAD, 3 SECTION, 12" LENS, 1–WAY
632	20102	6	EACH	PEDESTRIAN SIGNAL HEAD, TYPE A2, AS PER PLAN
632	25000	8	EACH	COVERING OF VEHICULAR SIGNAL HEAD
632	26000	2	EACH	PEDESTRIAN PUSH BUTTON
632	26500	2	EACH	DETECTOR LOOP
632	27105	1	EACH	LOOP DETECTOR UNIT, 2 CHANNEL, DELAY AND EXTENSION TYPE, AS PER PLAN
632	40300	233	LF	SIGNAL CABLE, 3 CONDUCTOR, NO. 14 AWG
632	40500	401	LF	SIGNAL CABLE, 5 CONDUCTOR, NO. 14 AWG
632	40700	96	LF	SIGNAL CABLE, 7 CONDUCTOR, NO. 14 AWG
632	64010	2	EACH	SIGNAL SUPPORT FOUNDATION
632	64020	2	EACH	PEDESTAL FOUNDATION
632	62803	355	LF	INTERCONNECT CABLE, INTEGRAL MESSENGER WIRE TYPE, 6 PAIR, NO.19 AWG, SOLID, REA (PE–38), AS PER PLAN
632	65200	197	LF	LOOP DETECTOR LEAD–IN CABLE
632	68200	30	LF	POWER CABLE, 2 CONDUCTOR, NO. 6 AWG
632	70001	1	EACH	POWER SERVICE, AS PER PLAN
632	75001	1	EACH	SIGNAL SUPPORT, TYPE TC–81.20 DESIGN 3 POLE, WITH MAST ARMS TC–81.20 DESIGN 1 AND DESIGN 1, AS PER PLAN
632	75031	1	EACH	SIGNAL SUPPORT, TYPE TC–81.20 DESIGN 4 POLE, WITH MAST ARMS TC–81.20 DESIGN 3 AND DESIGN 1, AS PER PLAN
632	89611	2	EACH	PEDESTAL, 9', AS PER PLAN
632	90101	1	EACH	REMOVAL OF TRAFFIC SIGNAL INSTALLATION, AS PER PLAN
633	38001	1	EACH	CONTROLLER, ACTUATED, 8 PHASE, SOLID STATE DIGITAL MICROPROCESSOR, AS PER PLAN
633	70500	8.6	SF	CONTROLLER WORK PAD
633	99000	1	EACH	CONTROLLER, MISC.: PREEMPTION, AS PER PLAN
642	00302	0.019	MILE	CENTER LINE, TYPE 2, AS PER PLAN
642	00602	231	LF	CROSSWALK LINE, TYPE 2
644	00500	26	LF	STOP LINE
633	99000	1	EACH	ALTERNATE BID: CONTROLLER, MISC.: PREEMPTION (EACH), AS PER PLAN

TIMING

PHASE	ø2	ø4	ø6	ø8
MOVEMENT	SB	WB	NB	EB
MIN. GREEN	20	10	20	10
VEHICLE EXTENSION	–	2.0	–	2.0
MAX 1	53	30	53	30
MAX 2	–	–	–	–
YELLOW	3.5	3.5	3.5	3.5
ALL RED	1.0	1.0	1.0	1.0
WALK	6	6	6	6
PED. CLEAR	8	11	8	11
RECALL	MIN	–	MIN	–
CALL TO NON–ACTUATED	1	–	1	–

COORDINATION TIMING (SECONDS)

CYCLE/OFFSET	PHASE ø2	ø4	ø6	ø8	DESCRIPTION
60/25	35	25	35	25	12AM–6AM, 7 DAYS
75/44	53	22	53	22	6AM–10:30AM, M–F
75/56	45	30	45	30	10:30AM–7PM, M–F
70/28	45	25	45	25	7PM–12AM M–F 6AM–12AM, SA & SU

NOTES:
1. OFFSETS REFERENCED TO BEGINNING OF ø2 & ø6
2. ø2, ø4, ø6 & ø8 TO BE PROGRAMMED FOR DUAL ENTRY

SIGNAL DISPLAY SCHEDULE

PHASE / SIGNAL	ø2 & ø6 R/W	ø2 & ø6 CLEARANCE			ø4 & ø8 R/W	ø4 & ø8 CLEARANCE			FLASH	PREEMPTION CALL SB R/W	PREEMPTION CALL SB CLEARANCE		PREEMPTION CALL WB R/W	PREEMPTION CALL WB CLEARANCE		PREEMPTION CALL NB R/W	PREEMPTION CALL NB CLEARANCE		PREEMPTION CALL EB R/W	PREEMPTION CALL EB CLEARANCE	
H1,H2	G	G	Y	R	R	R	R	R	Y	R	R	R	R	R	R	G	Y	R	R	R	R
H3,H4	G	G	Y	R	R	R	R	R	Y	G	Y	R	R	R	R	R	R	R	R	R	R
H5,H6	R	R	R	R	G	G	Y	R	R	R	R	R	G	Y	R	R	R	R	R	R	R
H7,H8	R	R	R	R	G	G	Y	R	R	R	R	R	R	R	R	R	R	R	G	Y	R
P1,P2, P3,P4	W	FDW	DW	DW	DW	DW	DW	DW	OFF	DW	DW	DW	DW	DW	DW	DW	DW	DW	DW	DW	DW
P5,P6	DW	DW	DW	DW	W	FDW	DW	DW	OFF	DW	DW	DW	DW	DW	DW	DW	DW	DW	DW	DW	DW

POLE ORIENTATION DATA CHART

SUPPORT NO.	POLE DESIGN NO.	MAST ARM DESIGN NO.	STATION & OFFSET	POLE HEIGHT (ft.)	PED SIGNALS	PED BUTTONS	HANDHOLE	CABLE ENTRANCE	POWER SERVICE	MAST ARM A ANGLE (DEG.)	MAST ARM B ANGLE (DEG.)	L (ft)	L1 (ft)	L2 (ft)	L3 (ft)		CONTROLLER
MAST ARM 1	3	1	17+98.3 24.2' LT.	23	180	–	180	–	–	0	–	24	11	23	–		–
		1	–	–	–	–	–	–	–	–	90	12	3	11	–		–
MAST ARM 2	4	3	18+31.7 31.1' RT.	23	90/180	90	180	180	45	0	–	34	12	21	33		180
		1	–	–	–	–	–	–	–	–	270	21	10	20	–		–
PEDESTAL 1	–	–	18+45.0 32.4' LT.	9	90/180	90	–	–	–	–	–	–	–	–	–		–
PEDESTAL 2	–	–	17+63.8 27.8' RT.	9	180	–	–	–	–	–	–	–	–	–	–		–

WIRING DIAGRAM

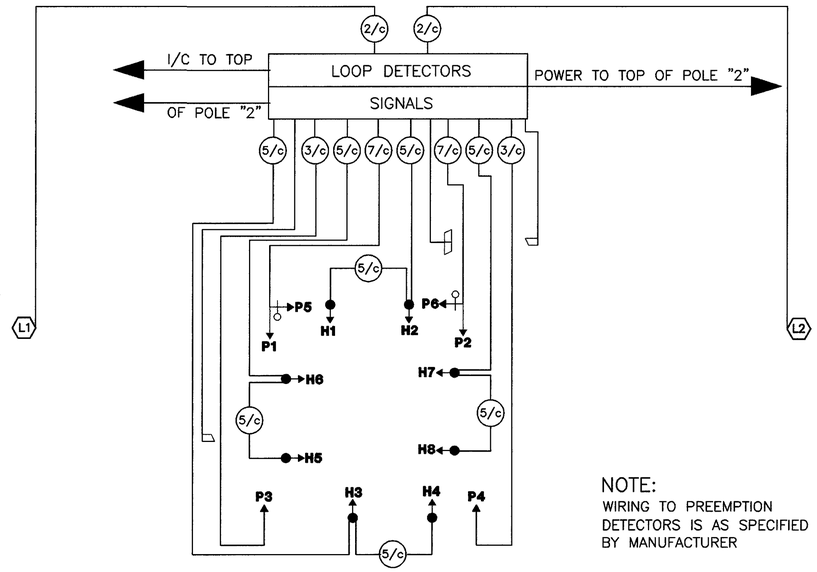

NOTE:
WIRING TO PREEMPTION DETECTORS IS AS SPECIFIED BY MANUFACTURER

CALCULATED: -- --
CHECKED: -- --

US 68 AND POWELL AVENUE
TRAFFIC SIGNAL PLAN

CHP-36-14.23
PID NO. 20258

19
50

P:\98240002\DWG\signal\98027B08.DWG.dwg – NOV 18, 1999 – 19:46:04

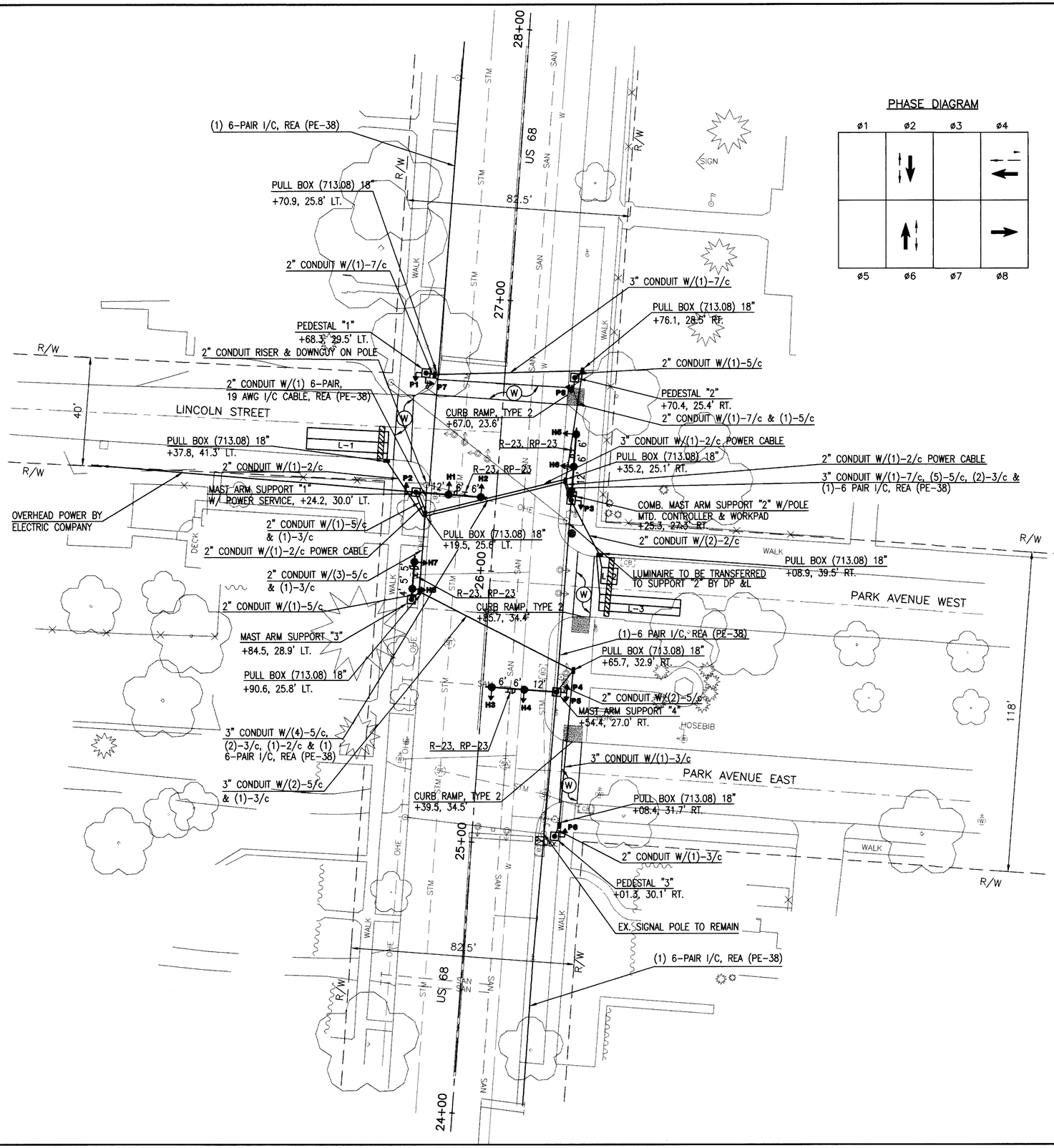

PHASE DIAGRAM

SIGNAL INDICATIONS

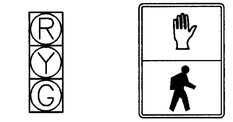

H1,H2,H3,H4,
H5,H6,H7,H8

P1,P2,P3,P4
P5,P6,P7,P8

ALL INDICATIONS ARE 12"

MOUNT R-73(A) ABOVE
ALL PUSHBUTTONS

REMOVE EXISTING R-23 & RP-23 SIGNS FROM
SPANS & RELOCATE TO MAST ARMS "1", "2", "3", & "4".

HORIZONTAL
SCALE IN FEET
20 0 20

CALCULATED: --
CHECKED: --

US 68 & PARK AVENUE / LINCOLN STREET
TRAFFIC SIGNAL PLAN

CHP-36-14.23
PID NO. 20258

20
50

P:\98240002\DWG\signal\98025G09.DWG.dwg - NOV 18, 1999 - 18:26:06

DETECTOR ASSIGNMENTS

LOOP	SIZE	TURNS	MODE	MEMORY	(E)XTEND/ (D)ELAY (SEC.)	UNIT	CHANNEL	PHASE
L-1	8' x 30'	2-4-2	PRESENCE	NON-LOCK	D-5	1	1	8
L-2	6' x 6'	3	PRESENCE	NON-LOCK	D-5	2	1	4
L-3	6' x 30'	2-4-2	PRESENCE	NON-LOCK	D-5	2	2	4

NOTES:
LOOPS L-1 AND L-3 ARE QUADROPLE

REMOVAL OF TRAFFIC SIGNAL INSTALLATION

DESCRIPTION OF ITEM TO BE REMOVED BY CONTRACTOR	REMOVE AND SALVAGE	REMOVE AND DISPOSE
VEHICULAR SIGNAL HEADS (10)-3 SECTION, 1-WAY	X	
POLE MOUNTED CONTROL CABINET AND CONTROLLER	X	
(2) WOODEN POLES	X	
(1) PEDESTAL	X	
CABLE & WIRE		X

TRAFFIC CONTROL QUANTITIES

ITEM	EXT.	QTY.	UNITS	DESCRIPTION
608	54000	115	SF	CURB RAMP, TYPE 2
625	25400	131	LF	CONDUIT, 2", 713.04
625	25500	281	LF	CONDUIT, 3", 713.04
625	29000	124	LF	TRENCH
625	29501	75	LF	TRENCH IN PAVED AREA, TYPE A, AS PER PLAN
625	29601	184	LF	TRENCH IN PAVED AREA, TYPE B
625	30700	9	EACH	PULL BOX, 713.08, 18"
625	32000	7	EACH	GROUND ROD
630	79100	4	EACH	SIGN HANGER ASSEMBLY, MAST ARM
630	79500	2	EACH	SIGN SUPPORT ASSEMBLY, POLE MOUNTED
630	87100	4	EACH	REMOVAL OF OVERHEAD MOUNTED SIGN AND REERECTION
632	00300	8	EACH	VEHICULAR SIGNAL HEAD, 3 SECTION, 12" LENS, 1-WAY
632	20102	8	EACH	PEDESTRIAN SIGNAL HEAD, TYPE A2, AS PER PLAN
632	25000	8	EACH	COVERING OF VEHICULAR SIGNAL HEAD
632	26000	2	EACH	PEDESTRIAN PUSH BUTTON
632	26500	3	EACH	DETECTOR LOOP
632	27105	2	EACH	LOOP DETECTOR UNIT, 2 CHANNEL, DELAY AND EXTENSION TYPE, AS PER PLAN
632	40300	346	LF	SIGNAL CABLE, 3 CONDUCTOR, NO. 14 AWG
632	40500	792	LF	SIGNAL CABLE, 5 CONDUCTOR, NO. 14 AWG
632	40700	131	LF	SIGNAL CABLE, 7 CONDUCTOR, NO. 14 AWG
632	62803	672	LF	INTERCONNECT CABLE, INTEGRAL MESSENGER WIRE TYPE, 6 PAIR, NO. 19 AWG, SOLID, REA (PE-38), AS PER PLAN
632	64010	4	EACH	SIGNAL SUPPORT FOUNDATION
632	64020	3	EACH	PEDESTAL FOUNDATION
632	65200	155	LF	LOOP DETECTOR LEAD-IN CABLE
632	68200	118	LF	POWER CABLE, 2 CONDUCTOR, NO. 6 AWG
632	70001	1	EACH	POWER SERVICE, AS PER PLAN
632	70400	1	EACH	CONDUIT RISER, 2 IN. DIAMETER
632	80101	1	EACH	SIGNAL SUPPORT, TYPE TC-81.20, DESIGN 1 , AS PER PLAN
632	80201	2	EACH	SIGNAL SUPPORT, TYPE TC-81.20, DESIGN 2 , AS PER PLAN
632	81201	1	EACH	COMBINATION SIGNAL SUPPORT, TYPE TC-81.20, DESIGN 2 , AS PER PLAN
632	89400	1	EACH	DOWNGUY
632	89611	3	EACH	PEDESTAL, 9', AS PER PLAN
632	90101	1	EACH	REMOVAL OF TRAFFIC SIGNAL INSTALLATION, AS PER PLAN
633	38001	1	EACH	CONTROLLER, ACTUATED, 8 PHASE, SOLID STATE DIGITAL MICROPROCESSOR, AS PER PLAN
633	70500	8.6	SF	CONTROLLER WORK PAD
633	99000	1	EACH	CONTROLLER, MISC.: PREEMPTION, AS PER PLAN
642	00602	244	LF	CROSSWALK LINE, TYPE 2
644	00500	34	LF	STOP LINE
633	99000	1	EACH	ALTERNATE BID: CONTROLLER, MISC.: PREEMPTION, AS PER PLAN

TIMING

PHASE	ø2	ø4	ø6	ø8
MOVEMENT	SB	WB	NB	EB
MIN. GREEN	20	10	20	10
VEHICLE EXTENSION	–	2.0	–	2.0
MAX 1	53	25	53	25
MAX 2	–	–	–	–
YELLOW	3.5	3.5	3.5	3.5
ALL RED	1.0	1.0	1.0	1.0
WALK	6	6	6	6
PED. CLEAR	8	11	8	11
RECALL	MIN	–	MIN	–
CALL TO NON-ACTUATED	1	–	1	–

COORDINATION TIMING (SECONDS)

CYCLE/OFFSET	PHASE ø2	ø4	ø6	ø8	DESCRIPTION
60/27	35	25	35	25	12AM-6AM, 7 DAYS
75/29	53	22	53	22	6AM-10:30AM, M-F
75/74	53	22	53	22	10:30AM-7PM, M-F
70/16	45	25	45	25	7PM-12AM M-F 6AM-12AM, SA & SU

NOTES:
1. OFFSETS REFERENCED TO BEGINNING OF ø2 & ø6
2. ø2, ø4, ø6, & ø8 TO BE PROGRAMMED FOR DUAL ENTRY.

SIGNAL DISPLAY SCHEDULE

PHASE / SIGNAL	ø2 & ø6 R/W	ø2 & ø6 CLEARANCE			ø4 & ø8 R/W	ø4 & ø8 CLEARANCE			FLASH	PREEMPTION CALL SB R/W	PREEMPTION CALL SB CLEARANCE		PREEMPTION CALL WB R/W	PREEMPTION CALL WB CLEARANCE		PREEMPTION CALL NB R/W	PREEMPTION CALL NB CLEARANCE		PREEMPTION CALL EB R/W	PREEMPTION CALL EB CLEARANCE	
H1,H2	G	G	Y	R	R	R	R	R	Y	G	Y	R	R	R	R	R	R	R	R	R	R
H3,H4	G	G	Y	R	R	R	R	R	Y	R	R	R	R	R	R	G	Y	R	R	R	R
H5,H6	R	R	R	R	G	G	Y	R	R	R	R	R	R	R	R	R	R	R	G	Y	R
H7,H8	R	R	R	R	G	G	Y	R	R	R	R	R	G	Y	R	R	R	R	R	R	R
P1,P2,P3, P4,P5,P6	W	FDW	DW	DW	DW	DW	DW	DW	OFF	DW	DW	DW	DW	DW	DW	DW	DW	DW	DW	DW	DW
P7,P8	DW	DW	DW	DW	W	FDW	DW	DW	OFF	DW	DW	DW	DW	DW	DW	DW	DW	DW	DW	DW	DW

POLE ORIENTATION DATA CHART

SUPPORT NO.	POLE DESIGN NO.	MAST ARM DESIGN NO.	STATION & OFFSET	POLE HEIGHT (ft.)	PED SIGNALS	PED BUTTONS	HANDHOLE	CABLE ENTRANCE	POWER SERVICE	LUMINAIRE ARM	MAST ARM A ANGLE (DEG.)	MAST ARM B ANGLE (DEG.)	ℓ (ft)	L1 (ft)	L2 (ft)	L3 (ft)	LUMINAIRE ARM LENGTH (ft)	CONTROLLER
MAST ARM 1	2	2	26+24.2, 30.0' LT.	23	180	–	180	–	180		0	–	25	12	18	24		–
MAST ARM 2	2	2	26+25.3, 27.3' RT.	30	90	–	90	180	–		90	–	25	12	18	24		0
MAST ARM 3	1	1	25+84.5, 28.9' LT.	23	–	–	270	–	–		270	–	15	4	9	14		–
MAST ARM 4	2	2	25+54.4, 27.0' RT.	23	180	–	180	–	–		0	–	25	12	18	24		–
PEDESTAL 1	–	–	26+68.3, 29.5' LT.	9	90/180	90	–	–	–		–	–	–	–	–	–		–
PEDESTAL 2	–	–	26+70.4, 25.4' RT.	9	270	270	–	–	–		–	–	–	–	–	–		–
PEDESTAL 3	–	–	25+01.3, 30.1' RT.	9	180	–	–	–	–		–	–	–	–	–	–		–

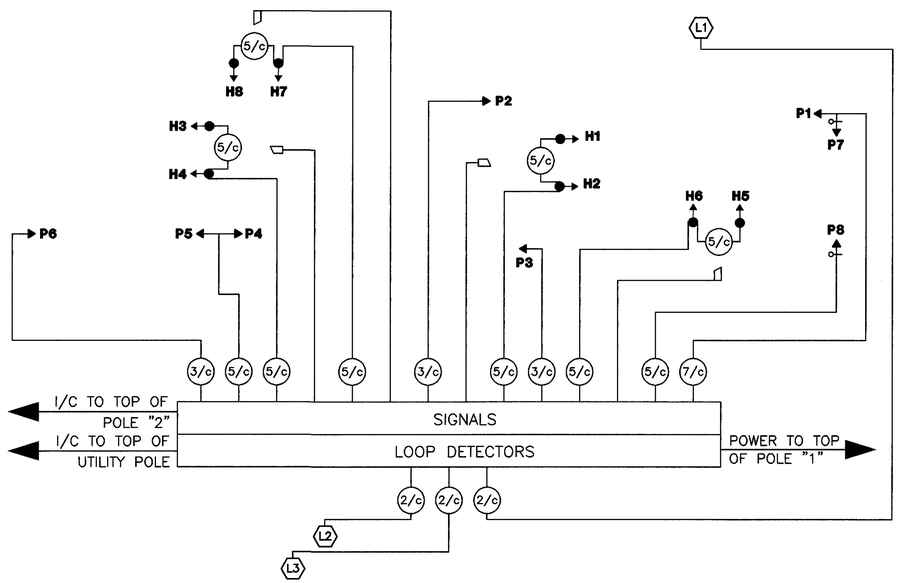

WIRING DIAGRAM

NOTE:
WIRING TO PREEMPTION DETECTORS IS AS SPECIFIED BY MANUFACTURER

CALCULATED: : :
CHECKED: : :

US 68 AND PARK AVENUE / LINCOLN STREET
TRAFFIC SIGNAL PLAN

CHP-36-14.23
PID NO. 20258

21
50

P:\98240002\DWG\signal\9802TB09.DWG.dwg - NOV 18, 1999 - 18:58:48

PHASE DIAGRAM

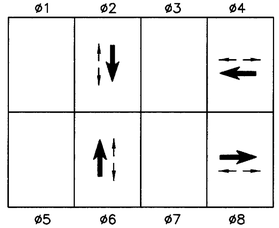

SIGNAL INDICATIONS

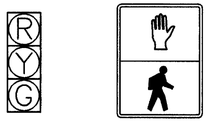

H1,H2,H3,H4,
H5,H6,H7,H8

TYPE A2
SYMBOLIC

P1,P2,P3,P4,
P5,P6,P7,P8

ALL INDICATIONS ARE 12"

(R-73A)

MOUNT ABOVE
ALL PUSHBUTTONS

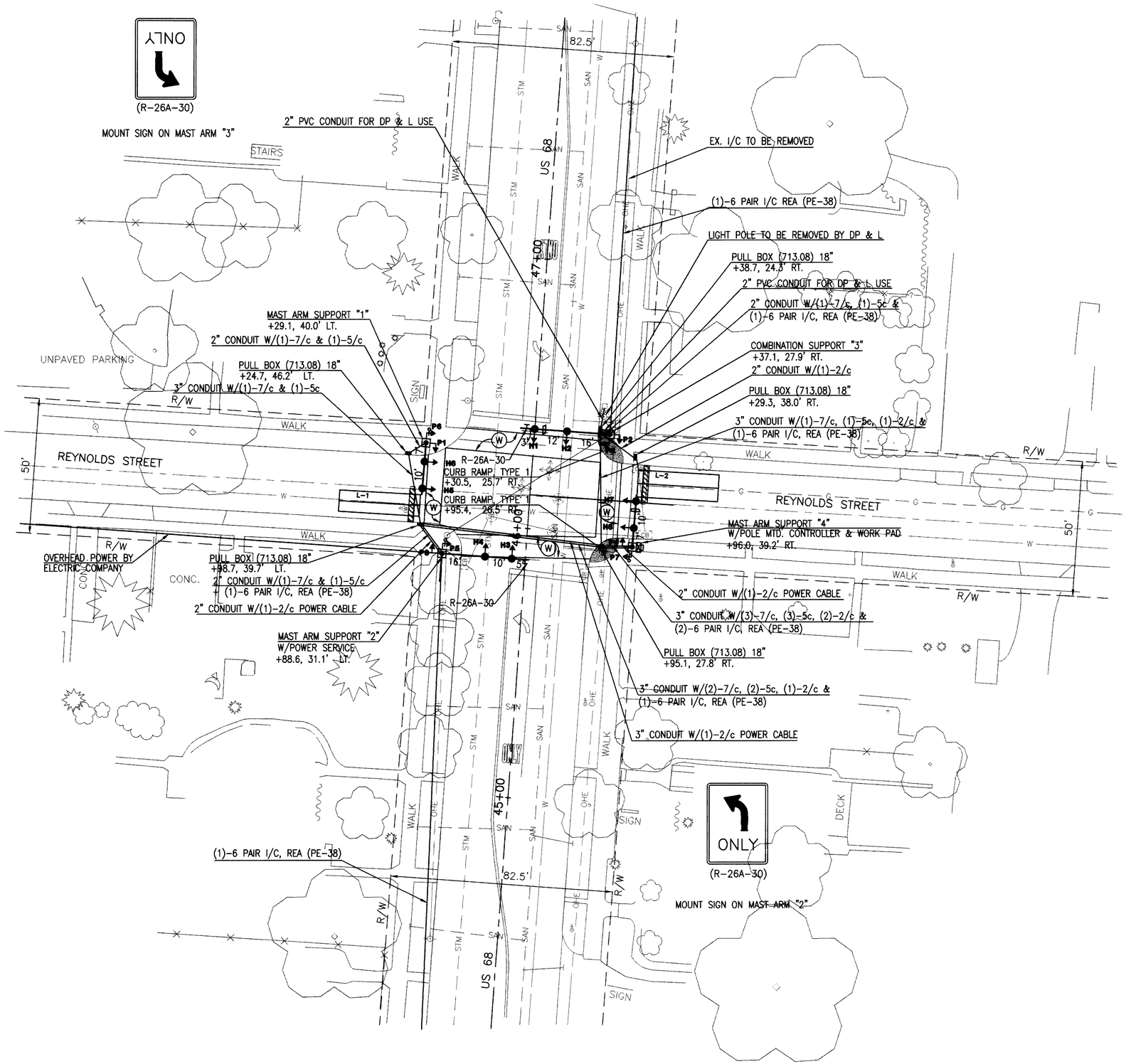

P:\98240002\DWG\signal\9802SG10.DWG.dwg - NOV 18, 1999 - 18:29:04

HORIZONTAL SCALE IN FEET
20 0 20

CALCULATED: --
CHECKED: --

US 68 AND REYNOLDS STREET
TRAFFIC SIGNAL PLAN

CHP-36-14.23
PID NO. 20258

22
50

DETECTOR ASSIGNMENTS

LOOP	SIZE	TURNS	MODE	MEMORY	(E)XTEND/ (D)ELAY (SEC.)	UNIT	CHANNEL	PHASE
L-1	8' x 30'	2-4-2	PRESENCE	NON-LOCK	D-5	1	1	8
L-2	10' x 30'	2-4-2	PRESENCE	NON-LOCK	D-5	1	2	4

NOTES:
ALL LOOPS ARE QUADROPOLE

TIMING

PHASE	ø2	ø4	ø6	ø8
MOVEMENT	SB	WB	NB	EB
MIN. GREEN	20	10	20	10
VEHICLE EXTENSION	–	2.0	–	2.0
MAX 1	53	25	53	25
MAX 2	–	–	–	–
YELLOW	3.5	3.5	3.5	3.5
ALL RED	1.0	1.0	1.0	1.0
WALK	6	6	6	6
PED. CLEAR	10	11	10	11
RECALL	MIN	–	MIN	–
CALL TO NON-ACTUATED	1	–	1	–

REMOVAL OF TRAFFIC SIGNAL INSTALLATION

DESCRIPTION OF ITEM TO BE REMOVED BY CONTRACTOR	REMOVE AND SALVAGE	REMOVE AND DISPOSE
VEHICULAR SIGNAL HEADS (8)-3 SECTION, 1-WAY	X	
(2) WOODEN POLES	X	
CABLE & WIRE		X

TRAFFIC CONTROL QUANTITIES

ITEM	EXT.	QTY.	UNITS	DESCRIPTION
608	53000	220	SF	CURB RAMP, TYPE 1
625	25400	76	LF	CONDUIT, 2", 713.04
625	25402	12	LF	CONDUIT, 2", 713.07
625	25500	217	LF	CONDUIT, 3", 713.04
625	29000	10	LF	TRENCH
625	29501	45	LF	TRENCH IN PAVED AREA, TYPE A, AS PER PLAN
625	29601	137	LF	TRENCH IN PAVED AREA, TYPE B
625	30700	5	EACH	PULL BOX, 713.08, 18"
625	32000	4	EACH	GROUND ROD
630	79100	2	EACH	SIGN HANGER ASSEMBLY, MAST ARM
630	79500	2	EACH	SIGN SUPPORT ASSEMBLY, POLE MOUNTED
630	80100	15	SF	SIGN, FLAT SHEET
632	00300	8	EACH	VEHICULAR SIGNAL HEAD, 3 SECTION, 12" LENS, 1-WAY
632	20102	8	EACH	PEDESTRIAN SIGNAL HEAD, TYPE A2, AS PER PLAN
632	25000	8	EACH	COVERING OF VEHICULAR SIGNAL HEAD
632	26000	4	EACH	PEDESTRIAN PUSH BUTTON
632	26500	2	EACH	DETECTOR LOOP
632	27105	1	EACH	LOOP DETECTOR UNIT, 2 CHANNEL, DELAY AND EXTENSION TYPE, AS PER PLAN
632	40500	512	LF	SIGNAL CABLE, 5 CONDUCTOR, NO. 14 AWG
632	40700	372	LF	SIGNAL CABLE, 7 CONDUCTOR, NO. 14 AWG
632	62803	425	LF	INTERCONNECT CABLE, INTEGRAL MESSENGER WIRE TYPE, 6 PAIR, NO. 19 AWG, SOLID, REA (PE-38), AS PER PLAN
632	64010	4	EACH	SIGNAL SUPPORT FOUNDATION
632	65200	200	LF	LOOP DETECTOR LEAD-IN CABLE
632	68200	133	LF	POWER CABLE, 2 CONDUCTOR, NO. 6 AWG
632	70001	1	EACH	POWER SERVICE, AS PER PLAN
632	80101	2	EACH	SIGNAL SUPPORT, TYPE TC-81.20, DESIGN 1, AS PER PLAN
632	80301	1	EACH	SIGNAL SUPPORT, TYPE TC-81.20, DESIGN 3, AS PER PLAN
632	81301	1	EACH	COMBINATION SIGNAL SUPPORT, TYPE TC-81.20, DESIGN 3, AS PER PLAN
632	90101	1	EACH	REMOVAL OF TRAFFIC SIGNAL INSTALLATION, AS PER PLAN
633	38001	1	EACH	CONTROLLER, ACTUATED, 8 PHASE, SOLID STATE DIGITAL MICROPROCESSOR, AS PER PLAN
633	70500	8.6	SF	CONTROLLER WORK PAD
633	99000	1	EACH	CONTROLLER, MISC.: PREEMPTION (EACH), AS PER PLAN
642	00602	315	LF	CROSSWALK LINE, TYPE 2
644	00500	26	LF	STOP LINE
633	99000	1	EACH	ALTERNATE BID: CONTROLLER, MISC.: PREEMPTION, AS PER PLAN

COORDINATION TIMING (SECONDS)

CYCLE/OFFSET	PHASE ø2	PHASE ø4	PHASE ø6	PHASE ø8	DESCRIPTION
60/26	35	25	35	25	12AM-6AM, 7 DAYS
75/49	53	22	53	22	6AM-10:30AM, M-F
75/46	53	22	53	22	10:30AM-7PM, M-F
70/50	45	25	45	25	7PM-12AM M-F 6AM-12AM, SA & SU

NOTES:
1. OFFSETS REFERENCED TO BEGINNING OF ø2 & ø6
2. ø2, ø4, ø6, & ø8 TO BE PROGRAMMED FOR DUAL ENTRY.

SIGNAL DISPLAY SCHEDULE

PHASE / SIGNAL	ø2 & ø6 R/W	ø2 & ø6 CLEARANCE			ø4 & ø8 R/W	ø4 & ø8 CLEARANCE			FLASH	PREEMPTION CALL SB R/W	PREEMPTION CALL SB CLEARANCE		PREEMPTION CALL WB R/W	PREEMPTION CALL WB CLEARANCE		PREEMPTION CALL NB R/W	PREEMPTION CALL NB CLEARANCE		PREEMPTION CALL EB R/W	PREEMPTION CALL EB CLEARANCE	
H1,H2	G	G	Y	R	R	R	R	R	Y	R	R	R	R	R	R	G	Y	R	R	R	R
H3,H4	G	G	Y	R	R	R	R	R	Y	G	Y	R	R	R	R	R	R	R	R	R	R
H5,H6	R	R	R	R	G	G	Y	R	R	R	R	R	G	Y	R	R	R	R	R	R	R
H7,H8	R	R	R	R	G	G	Y	R	R	R	R	R	R	R	R	R	R	R	G	Y	R
P1,P2, P3,P4	W	FDW	DW	DW	DW	DW	DW	DW	OFF	DW	DW	DW	DW	DW	DW	DW	DW	DW	DW	DW	DW
P5,P6, P7,P8	DW	DW	DW	DW	W	FDW	DW	DW	OFF	DW	DW	DW	DW	DW	DW	DW	DW	DW	DW	DW	DW

POLE ORIENTATION DATA CHART

SUPPORT NO.	POLE DESIGN NO.	MAST ARM DESIGN NO.	STATION & OFFSET	POLE HEIGHT (ft.)	PED SIGNALS	PED BUTTONS	HANDHOLE	CABLE ENTRANCE	POWER SERVICE	LUMINAIRE ARM	MAST ARM A ANGLE (DEG.)	MAST ARM B ANGLE (DEG.)	L (ft)	L1 (ft)	L2 (ft)	L3 (ft)	LUMINAIRE ARM LENGTH (ft)	CONTROLLER
MAST ARM 1	1	1	46+29.1, 40.0' LT.	23	180/270	180	180	–	–	–	90	–	18	7	17	–	–	–
MAST ARM 2	3	3	45+88.6, 31.1' LT.	23	180/270	270	180	90	90	–	0	–	32	16	26	31	–	–
MAST ARM 3	3	3	46+37.1, 27.9' RT.	30	180/270	270	180	90	–	0	0	–	32	16	28	31	8	–
MAST ARM 4	1	1	45+96.0, 39.2' RT.	23	180/270	180	180	–	–	–	90	–	18	7	17	–	–	90

WIRING DIAGRAM

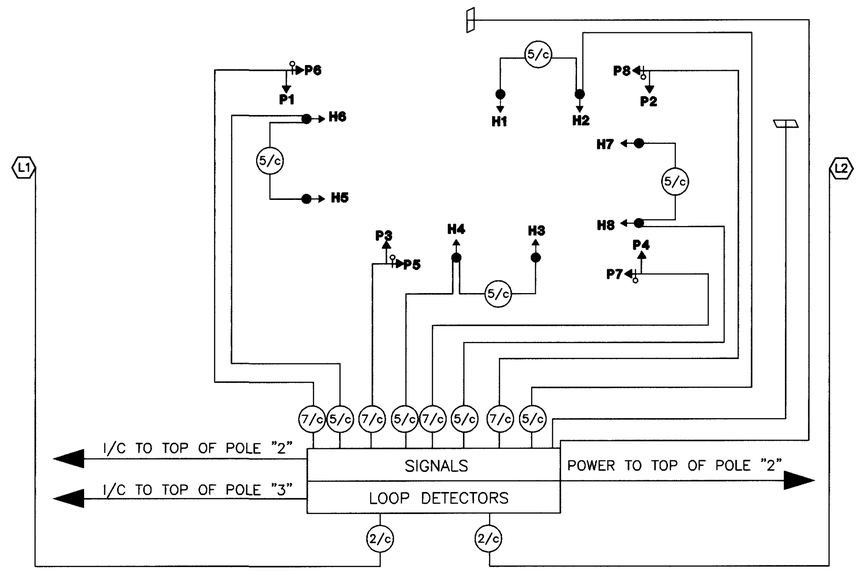

NOTE:
WIRING TO PREEMPTION DETECTORS IS AS SPECIFIED BY MANUFACTURER

CALCULATED: CHECKED:

US 68 AND REYNOLDS STREET
TRAFFIC SIGNAL PLAN

CHP-36-14.23
PID NO. 20258

23
50

P:\98240002\DWG\signal\9802TB10.DWG - NOV 18, 1999 - 18:30:56

PHASE DIAGRAM

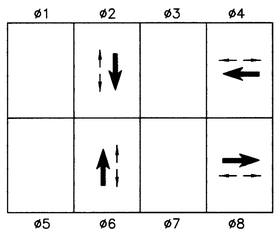

SIGNAL INDICATIONS

H1,H2,H3,H4,
H5,H6,H7,H8

TYPE A2
SYMBOLIC

P1,P2,P3,P4,
P5,P6,P7,P8

ALL INDICATIONS ARE 12"

(R-73A)

MOUNT ABOVE
ALL PUSHBUTTONS

(R-26A)

REMOVE SPAN MTD. SIGN AND
RELOCATE TO MAST ARM "2"

MOUNT R-26A-30 ON MAST ARM "4".

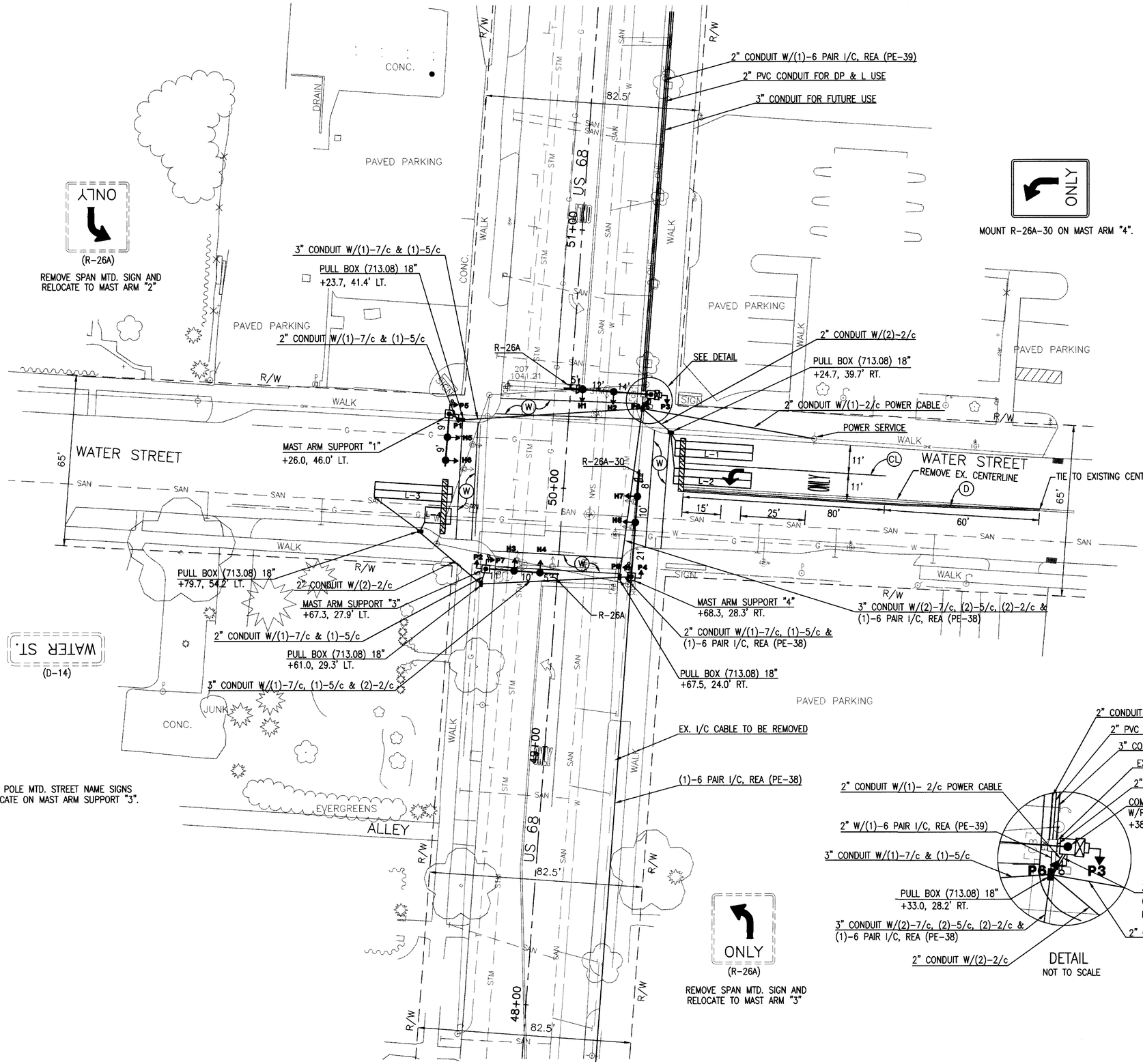

P:\98240002\DWG\signal\9802SG11.DWG - NOV 18, 1999 - 19:39:19

N

HORIZONTAL
SCALE IN FEET
20 0 20

CALCULATED:
CHECKED:

US 68 AND WATER STREET
TRAFFIC SIGNAL PLAN

CHP-36-14.23
PID NO. 20258

DETECTOR ASSIGNMENTS

LOOP	SIZE	TURNS	MODE	MEMORY	(E)XTEND/ (D)ELAY (SEC.)	UNIT	CHANNEL	PHASE
L-1	6' x 30'	2-4-2	PRESENCE	NON-LOCK	D-5	1	1	4
L-2	6' x 30'	2-4-2	PRESENCE	NON-LOCK	D-5	1	2	4
L-3	6' x 30'	2-4-2	PRESENCE	NON-LOCK	D-5	2	1	8
L-4	6' x 10'	3	PRESENCE	NON-LOCK	D-5	2	2	8

NOTES:
LOOPS L-1, L-2, & L-3 ARE QUADROPOLE

REMOVAL OF TRAFFIC SIGNAL INSTALLATION

DESCRIPTION OF ITEM TO BE REMOVED BY CONTRACTOR	REMOVE AND SALVAGE	REMOVE AND DISPOSE
VEHICULAR SIGNAL HEADS (8)-3 SECTION, 1-WAY	X	
POLE MOUNTED CONTROL CABINET AND CONTROLLER	X	
(4) STRAIN POLES	X	
CABLE & WIRE		X

TRAFFIC CONTROL QUANTITIES

ITEM	EXT.	QTY.	UNITS	DESCRIPTION
625	25400	235	LF	CONDUIT, 2", 713.04
625	25402	105	LF	CONDUIT, 2", 713.07
625	25500	300	LF	CONDUIT, 3", 713.04
625	29501	174	LF	TRENCH IN PAVED AREA, TYPE A, AS PER PLAN
625	29601	167	LF	TRENCH IN PAVED AREA, TYPE B
625	30700	5	EACH	PULL BOX, 713.08, 18"
625	32000	4	EACH	GROUND ROD
630	79100	3	EACH	SIGN HANGER ASSEMBLY, MAST ARM
630	79500	6	EACH	SIGN SUPPORT ASSEMBLY, POLE MOUNTED
630	80100	7.5	SF	SIGN, FLAT SHEET
630	87100	2	EACH	REMOVAL OF OVERHEAD MOUNTED SIGN AND REERECTION
630	87520	2	EACH	REMOVAL OF POLE MOUNTED SIGN AND REERECTION
632	00300	8	EACH	VEHICULAR SIGNAL HEAD, 3 SECTION, 12" LENS, 1-WAY
632	20102	8	EACH	PEDESTRIAN SIGNAL HEAD, TYPE A2, AS PER PLAN
632	25000	8	EACH	COVERING OF VEHICULAR SIGNAL HEAD
632	26000	4	EACH	PEDESTRIAN PUSH BUTTON
632	26500	4	EACH	DETECTOR LOOP
632	27105	2	EACH	LOOP DETECTOR UNIT, 2 CHANNEL, DELAY AND EXTENSION TYPE, AS PER PLAN
632	40500	611	LF	SIGNAL CABLE, 5 CONDUCTOR, NO. 14 AWG
632	40700	443	LF	SIGNAL CABLE, 7 CONDUCTOR, NO. 14 AWG
632	53202	136	LF	INTERCONNECT CABLE, 6 PAIR, NO. 19 AWG, SOLID, REA (PE-39)
632	62803	230	LF	INTERCONNECT CABLE, INTEGRAL MESSENGER WIRE TYPE, 6 PAIR, NO. 19 AWG, SOLID, REA (PE-38), AS PER PLAN
632	64010	4	EACH	SIGNAL SUPPORT FOUNDATION
632	65200	458	LF	LOOP DETECTOR LEAD-IN CABLE
632	68200	100	LF	POWER CABLE, 2 CONDUCTOR, NO. 6 AWG
632	70001	1	EACH	POWER SERVICE, AS PER PLAN
632	80101	1	EACH	SIGNAL SUPPORT, TYPE TC-81.20, DESIGN 1, AS PER PLAN
632	80201	1	EACH	SIGNAL SUPPORT, TYPE TC-81.20, DESIGN 2, AS PER PLAN
632	80501	1	EACH	SIGNAL SUPPORT, TYPE TC-81.20, DESIGN 11, AS PER PLAN
632	81301	1	EACH	COMBINATION SIGNAL SUPPORT, TYPE TC-81.20, DESIGN 3, AS PER PLAN
632	90101	1	EACH	REMOVAL OF TRAFFIC SIGNAL INSTALLATION, AS PER PLAN
633	38001	1	EACH	CONTROLLER, ACTUATED, 8 PHASE, SOLID STATE DIGITAL MICROPROCESSOR, AS PER PLAN
633	99000	1	EACH	CONTROLLER, MISC.: PREEMPTION, AS PER PLAN
642	00302	0.027	MILE	CENTER LINE, TYPE 2
642	00402	80	LF	CHANNELIZING LINE, TYPE 2
642	00602	384	LF	CROSSWALK LINE, TYPE 2
642	30000	140	LF	REMOVAL OF PAVEMENT MARKING
644	00500	42	LF	STOP LINE
644	01300	1	EACH	LANE ARROW
644	01400	1	EACH	WORD ON PAVEMENT, 72"
633	99000	1	EACH	ALTERNATE BID: CONTROLLER, MISC.: PREEMPTION, AS PER PLAN

TIMING

PHASE	ø2	ø4	ø6	ø8
MOVEMENT	SB	WB	NB	EB
MIN. GREEN	20	10	20	10
VEHICLE EXTENSION	–	2.0	–	2.0
MAX 1	45	30	45	30
MAX 2	–	–	–	–
YELLOW	3.5	3.5	3.5	3.5
ALL RED	1.0	1.0	1.0	1.0
WALK	6	6	6	6
PED. CLEAR	10	12	10	12
RECALL	MIN	–	MIN	–
CALL TO NON-ACTUATED	1	–	1	–

COORDINATION TIMING (SECONDS)

CYCLE/OFFSET	PHASE ø2	ø4	ø6	ø8	DESCRIPTION
60/30	35	25	35	25	12AM-6AM, 7 DAYS
75/49	45	30	45	30	6AM-10:30AM, M-F
75/45	45	30	45	30	10:30AM-7PM, M-F
70/40	42	28	42	28	7PM-12AM M-F 6AM-12AM, SA & SU

NOTES:
1. OFFSETS REFERENCED TO BEGINNING OF ø2 & ø6
2. ø2, ø4, ø6, & ø8 TO BE PROGRAMMED FOR DUAL ENTRY.

SIGNAL DISPLAY SCHEDULE

PHASE / SIGNAL	ø2 & ø6 R/W	ø2 & ø6 CLEARANCE			ø4 & ø8 R/W	ø4 & ø8 CLEARANCE			FLASH	PREEMPTION CALL SB R/W	PREEMPTION CALL SB CLEARANCE		PREEMPTION CALL WB R/W	PREEMPTION CALL WB CLEARANCE		PREEMPTION CALL NB R/W	PREEMPTION CALL NB CLEARANCE		PREEMPTION CALL EB R/W	PREEMPTION CALL EB CLEARANCE	
H1,H2	G	G	Y	R	R	R	R	R	Y	R	R	R	R	R	R	G	Y	R	R	R	R
H3,H4	G	G	Y	R	R	R	R	R	Y	G	Y	R	R	R	R	R	R	R	R	R	R
H5,H6	R	R	R	R	G	G	Y	R	R	R	R	R	G	Y	R	R	R	R	R	R	R
H7,H8	R	R	R	R	G	G	Y	R	R	R	R	R	R	R	R	R	R	R	G	Y	R
P1,P2, P3,P4	W	FDW	DW	DW	DW	DW	DW	DW	OFF	DW	DW	DW	DW	DW	DW	DW	DW	DW	DW	DW	DW
P5,P6, P7,P8	DW	DW	DW	DW	W	FDW	DW	DW	OFF	DW	DW	DW	DW	DW	DW	DW	DW	DW	DW	DW	DW

POLE ORIENTATION DATA CHART

SUPPORT NO.	POLE DESIGN NO.	MAST ARM DESIGN NO.	STATION & OFFSET	POLE HEIGHT (ft.)	PED SIGNALS	PED BUTTONS	HANDHOLE	CABLE ENTRANCE	POWER SERVICE	LUMINAIRE ARM	MAST ARM A ANGLE (DEG.)	MAST ARM B ANGLE (DEG.)	L (ft)	L1 (ft)	L2 (ft)	L3 (ft)	LUMINAIRE ARM LENGTH (ft)	CONTROLLER
MAST ARM 1	1	1	50+26.0, 46.0' LT.	23	180/270	180	180	–	–	–	90	–	19	9	18	–	–	–
MAST ARM 2	3	3	50+38.9, 231.5' RT.	30	180/270	270	90	–	–	0	0	–	32	14	26	31	8	180
MAST ARM 3	2	2	49+67.3, 27.9' RT.	23	180/270	270	180	–	–	–	0	–	27	11	21	26	–	–
MAST ARM 4	11	11	49+68.3, 28.3' RT.	23	0/90	0	90	180	–	–	90	–	40	21	31	39	–	–

WIRING DIAGRAM

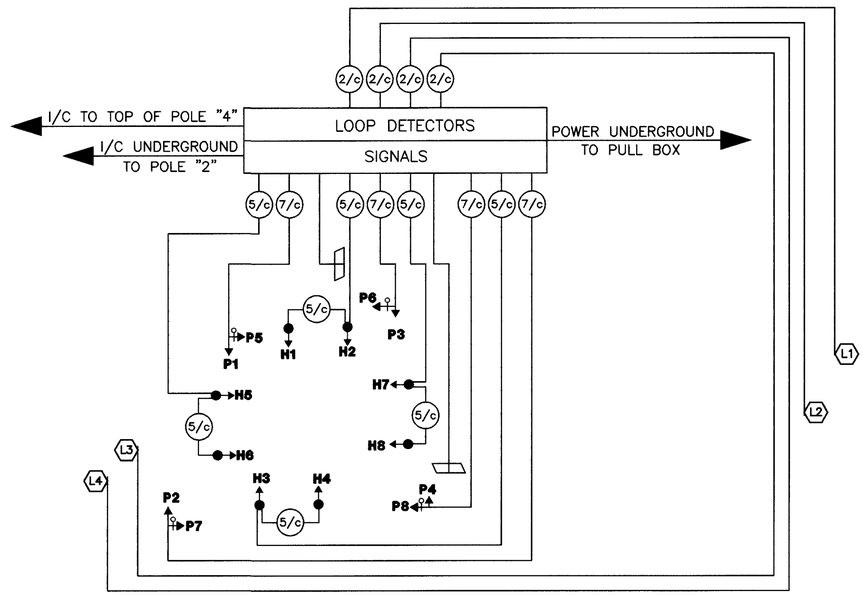

NOTE:
WIRING TO PREEMPTION DETECTORS IS AS SPECIFIED BY MANUFACTURER

CALCULATED: - -
CHECKED: - -

US 68 AND WATER STREET
TRAFFIC SIGNAL PLAN

CHP-36-14.23
PID NO. 20258

25
50

P:\98240002\DWG\signal\98027TB11.DWG.dwg - NOV 18, 1999 - 19:43:02

PHASE DIAGRAM

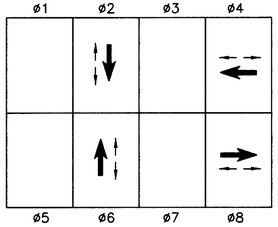

SIGNAL INDICATIONS

H1,H2,H3,H4,
H5,H6,H7,H8

TYPE A2
SYMBOLIC

P1,P2,P3,P4,
P5,P6,P7,P8

ALL INDICATIONS ARE 12"

(R-26A)

(SPECIAL)

RELOCATE SPAN MTD. SIGNS
TO MAST ARM SUPPORT "1".

(R-73A)

MOUNT ABOVE
ALL PUSHBUTTONS

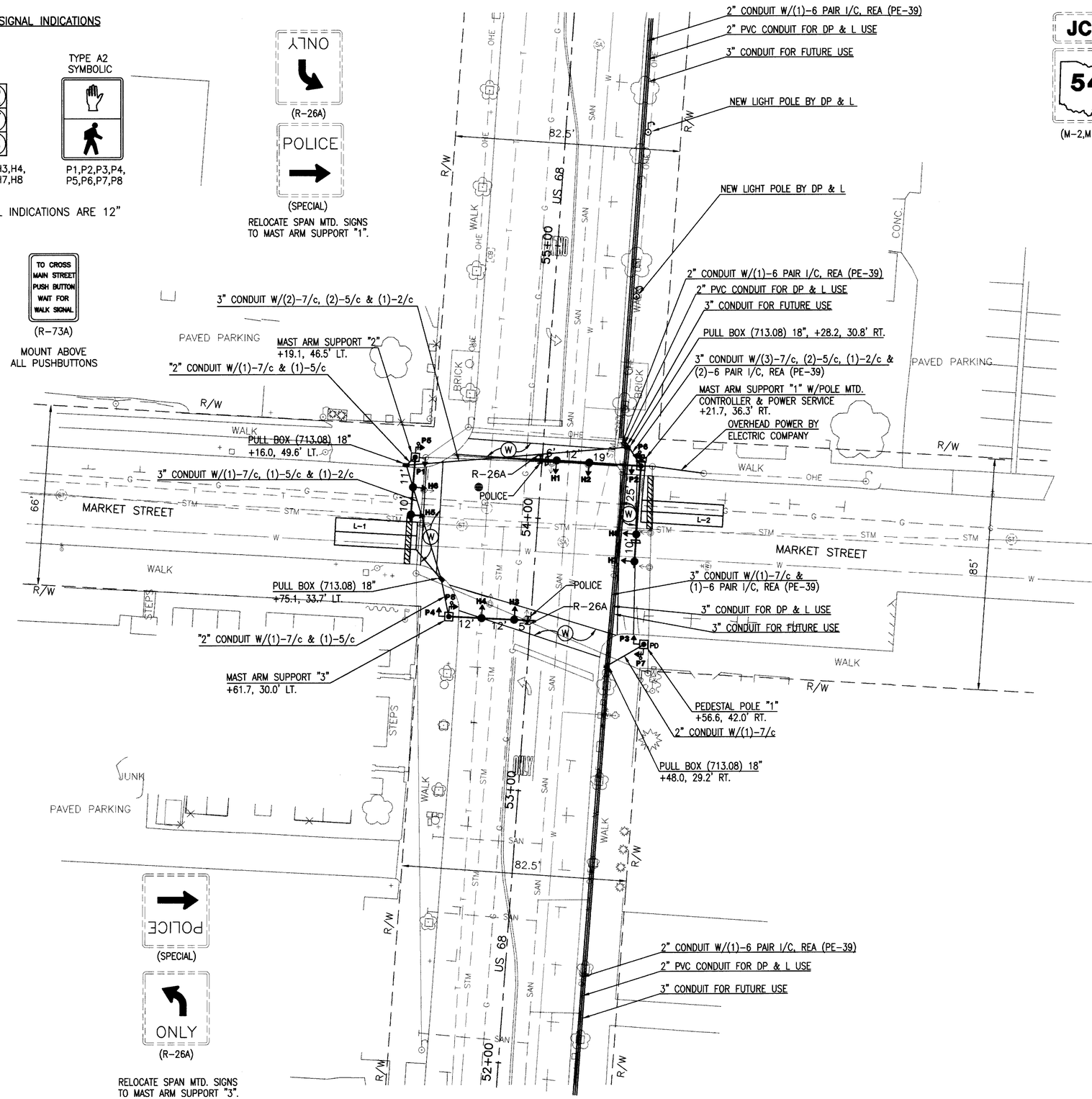

JCT 54 (M-2,M-17)

JCT 29 (M-2,M-17)

JCT 36 (M-1,M-17)

NO BICYCLES SKATEBOARDS OR ROLLERBLADES ARE ALLOWED IN BUSINESS DISTRICT

(SPECIAL)

RELOCATE POLE MTD. SIGNS
TO MAST ARM SUPPORT "1".

E. MARKET ST. (D-14)

S. MAIN ST. (D-14)

RELOCATE POLE MTD. STREET NAME
SIGNS TO MAST ARM SUPPORT "1".

S. MAIN ST. (D-14)

W. MARKET ST. (D-14)

RELOCATE POLE MTD. STREET NAME
SIGNS TO MAST ARM SUPPORT "3".

POLICE (SPECIAL)

ONLY (R-26A)

RELOCATE SPAN MTD. SIGNS
TO MAST ARM SUPPORT "3".

HORIZONTAL SCALE IN FEET
20 0 20

CALCULATED: --
CHECKED: --

US 68 AND MARKET STREET
TRAFFIC SIGNAL PLAN

CHP-36-14.23
PID NO. 20258

26
50

P:\98240002\DWG\signal\98025G12.DWG.dwg - NOV 18, 1999 - 15:00:12

DETECTOR ASSIGNMENTS

LOOP	SIZE	TURNS	MODE	MEMORY	(E)XTEND/ (D)ELAY (SEC.)	UNIT	CHANNEL	PHASE
L-1	10' x 30'	2-4-2	PRESENCE	NON-LOCK	D-5	1	1	8
L-2	8' x 30'	2-4-2	PRESENCE	NON-LOCK	D-5	1	2	4

NOTES:
ALL LOOPS ARE QUADROPOLE

TIMING

PHASE	ø2	ø4	ø6	ø8
MOVEMENT	SB	WB	NB	EB
MIN. GREEN	20	10	20	10
VEHICLE EXTENSION	–	2.0	–	2.0
MAX_1	52	25	52	25
MAX_2	–	–	–	–
YELLOW	3.5	3.5	3.5	3.5
ALL RED	1.0	1.0	1.0	1.0
WALK	6	6	6	6
PED. CLEAR	13	12	13	12
RECALL	MIN	–	MIN	–
CALL TO NON-ACTUATED	1	–	1	–

COORDINATION TIMING (SECONDS)

CYCLE/OFFSET	PHASE ø2	ø4	ø6	ø8	DESCRIPTION
60/29	35	25	35	25	12AM-6AM, 7 DAYS
75/63	52	23	52	23	6AM-10:30AM, M-F
75/63	52	23	52	23	10:30AM-7PM, M-F
70/69	45	25	45	25	7PM-12AM M-F 6AM-12AM, SA & SU

NOTES:
1. OFFSETS REFERENCED TO BEGINNING OF ø2 & ø6
2. ø2, ø4, ø6, & ø8 TO BE PROGRAMMED FOR DUAL ENTRY.

REMOVAL OF TRAFFIC SIGNAL INSTALLATION

DESCRIPTION OF ITEM TO BE REMOVED BY CONTRACTOR	REMOVE AND SALVAGE	REMOVE AND DISPOSE
VEHICULAR SIGNAL HEADS (8)-3 SECTION, 1-WAY	X	
POLE MOUNTED CONTROL CABINET AND CONTROLLER	X	
(4) STRAIN POLES	X	
CABLE & WIRE		X

TRAFFIC CONTROL QUANTITIES

ITEM	EXT.	QTY.	UNITS	DESCRIPTION
625	25400	251	LF	CONDUIT, 2", 713.04
625	25402	216	LF	CONDUIT, 2", 713.07
625	25500	604	LF	CONDUIT, 3", 713.04
625	29501	302	LF	TRENCH IN PAVED AREA, TYPE A, AS PER PLAN
625	29601	170	LF	TRENCH IN PAVED AREA, TYPE B
625	30700	4	EACH	PULL BOX, 713.08, 18"
625	32000	4	EACH	GROUND ROD
630	79100	2	EACH	SIGN HANGER ASSEMBLY, MAST ARM
630	79500	10	EACH	SIGN SUPPORT ASSEMBLY, POLE MOUNTED
630	87100	4	EACH	REMOVAL OF OVERHEAD MOUNTED SIGN AND REERECTION
630	87520	8	EACH	REMOVAL OF POLE MOUNTED SIGN AND REERECTION
632	00300	8	EACH	VEHICULAR SIGNAL HEAD, 3 SECTION, 12" LENS, 1-WAY
632	20102	8	EACH	PEDESTRIAN SIGNAL HEAD, TYPE A2, AS PER PLAN
632	25000	8	EACH	COVERING OF VEHICULAR SIGNAL HEAD
632	26000	4	EACH	PEDESTRIAN PUSH BUTTON
632	26500	2	EACH	DETECTOR LOOP
632	27105	1	EACH	LOOP DETECTOR UNIT, 2 CHANNEL, DELAY AND EXTENSION TYPE, AS PER PLAN
632	40500	532	LF	SIGNAL CABLE, 5 CONDUCTOR, NO. 14 AWG
632	40700	463	LF	SIGNAL CABLE, 7 CONDUCTOR, NO. 14 AWG
632	53202	345	LF	INTERCONNECT CABLE, 6 PAIR, NO. 19 AWG, SOLID, REA (PE-39)
632	64010	3	EACH	SIGNAL SUPPORT FOUNDATION
632	64020	1	EACH	PEDESTAL FOUNDATION
632	65200	175	LF	LOOP DETECTOR LEAD-IN CABLE
632	68200	10	LF	POWER CABLE, 2 CONDUCTOR, NO. 6 AWG
632	70001	1	EACH	POWER SERVICE, AS PER PLAN
632	75111	1	EACH	SIGNAL SUPPORT, TYPE TC-81.20 DESIGN 12 POLE, WITH MAST ARMS TC-81.20 DESIGN 11 AND DESIGN 3, AS PER PLAN
632	80101	1	EACH	SIGNAL SUPPORT, TYPE TC-81.20, DESIGN 1, AS PER PLAN
632	80201	1	EACH	SIGNAL SUPPORT, TYPE TC-81.20, DESIGN 2, AS PER PLAN
632	89611	1	EACH	PEDESTAL, 9', AS PER PLAN
632	90101	1	EACH	REMOVAL OF TRAFFIC SIGNAL INSTALLATION, AS PER PLAN
633	38001	1	EACH	CONTROLLER, ACTUATED, 8 PHASE, SOLID STATE DIGITAL MICROPROCESSOR, AS PER PLAN
633	99000	1	EACH	CONTROLLER, MISC.: PREEMPTION, AS PER PLAN
642	00602	427	LF	CROSSWALK LINE, TYPE 2
644	00500	36	LF	STOP LINE
633	99000	1	EACH	ALTERNATE BID: CONTROLLER, MISC.: PREEMPTION, AS PER PLAN

SIGNAL DISPLAY SCHEDULE

PHASE / SIGNAL	ø2 & ø6 R/W	CLEARANCE			ø4 & ø8 R/W	CLEARANCE			FLASH	PREEMPTION CALL SB R/W	CLEARANCE		PREEMPTION CALL WB R/W	CLEARANCE		PREEMPTION CALL NB R/W	CLEARANCE		PREEMPTION CALL EB R/W	CLEARANCE	
H1,H2	G	G	Y	R	R	R	R	R	Y	R	R	R	R	R	R	G	Y	R	R	R	R
H3,H4	G	G	Y	R	R	R	R	R	Y	G	Y	R	R	R	R	R	R	R	R	R	R
H5,H6	R	R	R	R	G	G	Y	R	R	R	R	R	G	Y	R	R	R	R	R	R	R
H7,H8	R	R	R	R	G	G	Y	R	R	R	R	R	R	R	R	R	R	R	G	Y	R
P1,P2, P3,P4	W	FDW	DW	DW	DW	DW	DW	DW	OFF	DW	DW	DW	DW	DW	DW	DW	DW	DW	DW	DW	DW
P5,P6, P7,P8	DW	DW	DW	DW	W	FDW	DW	DW	OFF	DW	DW	DW	DW	DW	DW	DW	DW	DW	DW	DW	DW

POLE ORIENTATION DATA CHART

SUPPORT NO.	POLE DESIGN NO.	MAST ARM DESIGN NO.	STATION & OFFSET	POLE HEIGHT (ft.)	PED SIGNALS	PED BUTTONS	HANDHOLE	CABLE ENTRANCE	POWER SERVICE	MAST ARM A ANGLE (DEG.)	MAST ARM B ANGLE (DEG.)	L (ft)	L1 (ft)	L2 (ft)	L3 (ft)		CONTROLLER
MAST ARM 1	12	11	54+21.7, 36.3' RT.	23	0/90	90	180		180	0	–	38	19	31	37		90
		3		–	–	–	–	–	–	–	270	36	25	35	–		–
MAST ARM 2	1	1	54+19.1, 46.5' LT.	23	180/270	180	180	–	–	90	–	22	11	21	–		–
MAST ARM 3	2	2	53+61.7, 30.0' LT.	23	180/270	270	180	–	–	0	–	30	12	24	29		–
PEDESTAL 1	–	–	53+56.6, 42.0' RT.	9	0/270	270	–	–	–	–	–	–	–	–	–		–

WIRING DIAGRAM

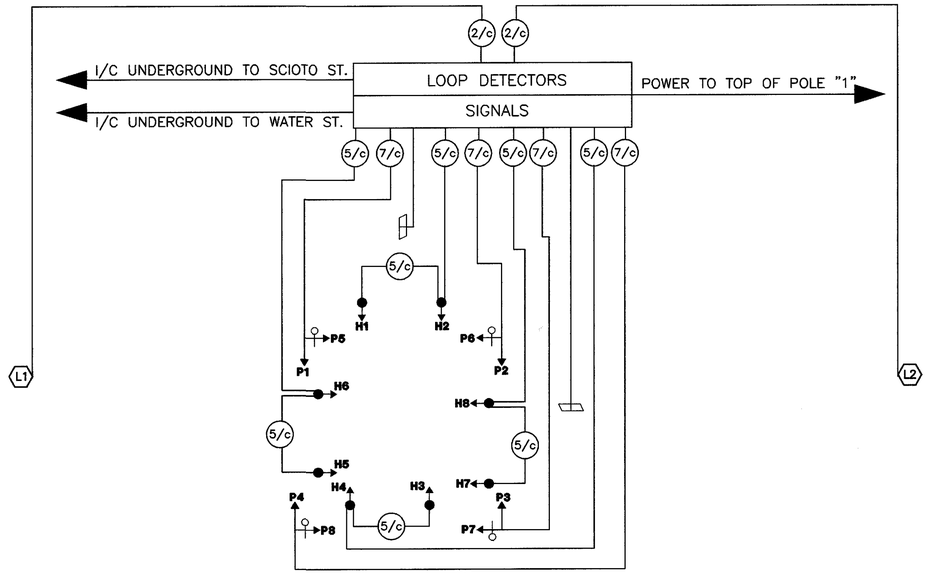

NOTE:
WIRING TO PREEMPTION DETECTORS IS AS SPECIFIED BY MANUFACTURER

CALCULATED: : :
CHECKED: : :

US 68 AND MARKET STREET
TRAFFIC SIGNAL STREET

CHP-36-14.23
PID NO. 20258

P:\98240002\DWG\signal\9802TB12.DWG.dwg - NOV 18, 1999 - 18:37:05

PHASE DIAGRAM

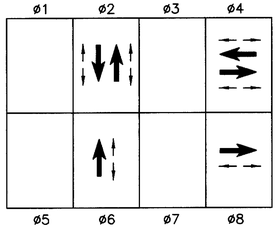

SIGNAL INDICATIONS

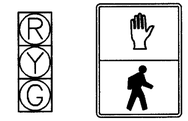

H1,H2,H3,H4, H5,H6,H7,H8

P1,P2,P3,P4 P5,P6,P7,P8

ALL INDICATIONS ARE 12"

NEW LIGHT POLE BY DP & L
EX. CONDUIT FOR DP & L USE
COMBINATION STRAIN POLE "5" ON EX. FOUNDATION
2" PVC CONDUIT FOR DP & L USE
2" CONDUIT W/(1)-3/c CONNECT TO EX. 2" FOUNDATION ELL.
PULL BOX (713.08) 18" +96.4, 33.3' LT.
2" CONDUIT W/(1)-5/c
MAST ARM SUPPORT "1" +87.1, 33.1' LT. "A"
2" CONDUIT W/(1)-3/c, CONNECT TO EX. 2" FOUNDATION ELL.
PULL BOX (713.08) 18" +97.3, 35.1' RT. "A"
2" CONDUIT W/(1)-5/c, (2)-3/c & (1)-6 PAIR I/C, REA (PE-39)
2" PVC CONDUIT FOR DP & L USE
3" CONDUIT FOR FUTURE USE
2" CONDUIT W/(1)-6 PAIR I/C, REA (PE-39)
3" CONDUIT FOR DP & L USE
3" CONDUIT W/(1)-5/c & (1)-3/c
PULL BOX (713.08) 18" +98.3, 125.9' RT.
MAST ARM SUPPORT "2", +39.9, 116.0' RT. "A"
PULL BOX (713.08) 18" +40.2, 127.6' RT. "A"
COMBINATION STRAIN POLE "7" ON EX. FOUNDATION
3" CONDUIT W/(2)-5/c, (3)-3/c & (1)-6 PAIR I/C, REA (PE-39)
PULL BOX (713.08) 18" +29.5, 28.1' LT.
2" CONDUIT W/(1)-3/c ,CONNECT TO EX. 2" FOUNDATION ELL.
COMBINATION STRAIN POLE "12" ON EX. FOUNDATION
3" CONDUIT W/(1)-3/c
MAST ARM ISLAND SEE DETAIL SHEET 9
EX. STOP LINE TO BE REMOVED
STREET LIGHT TO BE REPLACED BY DP & L
+38.1, 10.8' LT. "A"
+29.6, 8.0' LT. "A"
+40.4, 0.0' RT. "A"
+37.8, 11.8' RT. "A"
EX. CHANNELIZATION LINE & ARROWS TO BE REMOVED
+49.7, 17.3' LT. "B"
+06.1, 8.0' LT. "B"
+13.4, 22.4' LT. "B"
+19.6, 0.0' LT. "B"
+14.4, 21.0' RT. "B"
+46.6, 0.0' RT. "B"
+50.6, 18.8' RT. "B"
+60.1, 8.1' RT. "B"
+67.5, 10.5' LT. "A"
+65.5, 0.0' LT. "A"
+67.8, 11.0' RT. "A"
+75.8, 8.1' RT. "A"
2" CONDUIT W/ (1)-6 PAIR I/C, REA (PE-39)
2" PVC CONDUIT FOR DP & L USE
3" CONDUIT FOR FUTURE USE
2" CONDUIT W/(1)-3/c CONNECT TO EX. 2" FOUNDATION ELL.
PULL BOX (713.08) 18", +65.4, 127.1' LT.
MAST ARM SUPPORT "4", +68.9, 116.6' LT. "A"
2" CONDUIT W/(1)-5/c, (2)-3/c & (1)-6 PAIR I/C, REA (PE-39)
PULL BOX (713.08)18", +08.5, 125.6' LT.
STREET LIGHT TO BE REPLACED BY DP & L
PULL BOX (713.08) 24" +09.5, 35.5' LT.
2" CONDUIT W/(1)-3/c , CONNECT TO EX. 2" FOUNDATION ELL.
COMBINATION STRAIN POLE "10"
EX. CONDUIT FOR DP & L USE ON EX. FOUNDATION
3" CONDUIT W/(1)-5/c, (3)-3/c & (1)-6 PAIR I/C, REA (PE-39)
2" CONDUIT W/(1)-6 PAIR I/C, REA (PE-39)
NEW LIGHT POLE BY DP & L
CONTROLLER +17.9, 33.6' RT. "A" (SEE DETAIL)
MAST ARM SUPPORT "3" +19.2, 33.6' RT. "A"
PULL BOX (713.08) 18" +10.8, 126.0' RT.
NEW LIGHT POLES BY DP & L
PULL BOX (713.08) 24" +08.7, 28.9' RT. "A"
3" CONDUIT W/(4)-6 PAIR I/C, REA (PE-39)
3" CONDUIT W/(3)-5/c & (8)-3/c
2" CONDUIT W/(1)-2/c POWER CABLE
3" CONDUIT W/(2)-5/c, (4)-3/c & (2)-6 PAIR I/C, REA (PE-39)
COMBINATION STRAIN POLE "9" W/POWER SERVICE ON EX. FOUNDATION
EX. CONDUIT W/ (1)-2/c POWER CABLE BY CONTRACTOR LUMINAIRE CABLE BY DP&L
3" CONDUIT W/ (1)-2/c POWER CABLE

DETAIL
NOT TO SCALE

NOTES:
1. SEE SHEET 29 FOR SIGNING PLANS
2. CONTRACTOR TO COORDINATE WITH DP & L FOR INSTALLATION/REPLACEMENT OF STREET LIGHTS AND TRANSFER OF LUMINARIES TO NEW COMBINATION STRAIN POLES

HORIZONTAL SCALE IN FEET
20 0 20

CALCULATED: --
CHECKED: --

US 68 AND US 36 / SR 29 TRAFFIC SIGNAL PLAN

CHP-36-14.23
PID NO. 20258

28
50

P:\98240002\DWG\signal\98025G13.DWG - NOV 18, 1999 - 20:27:53

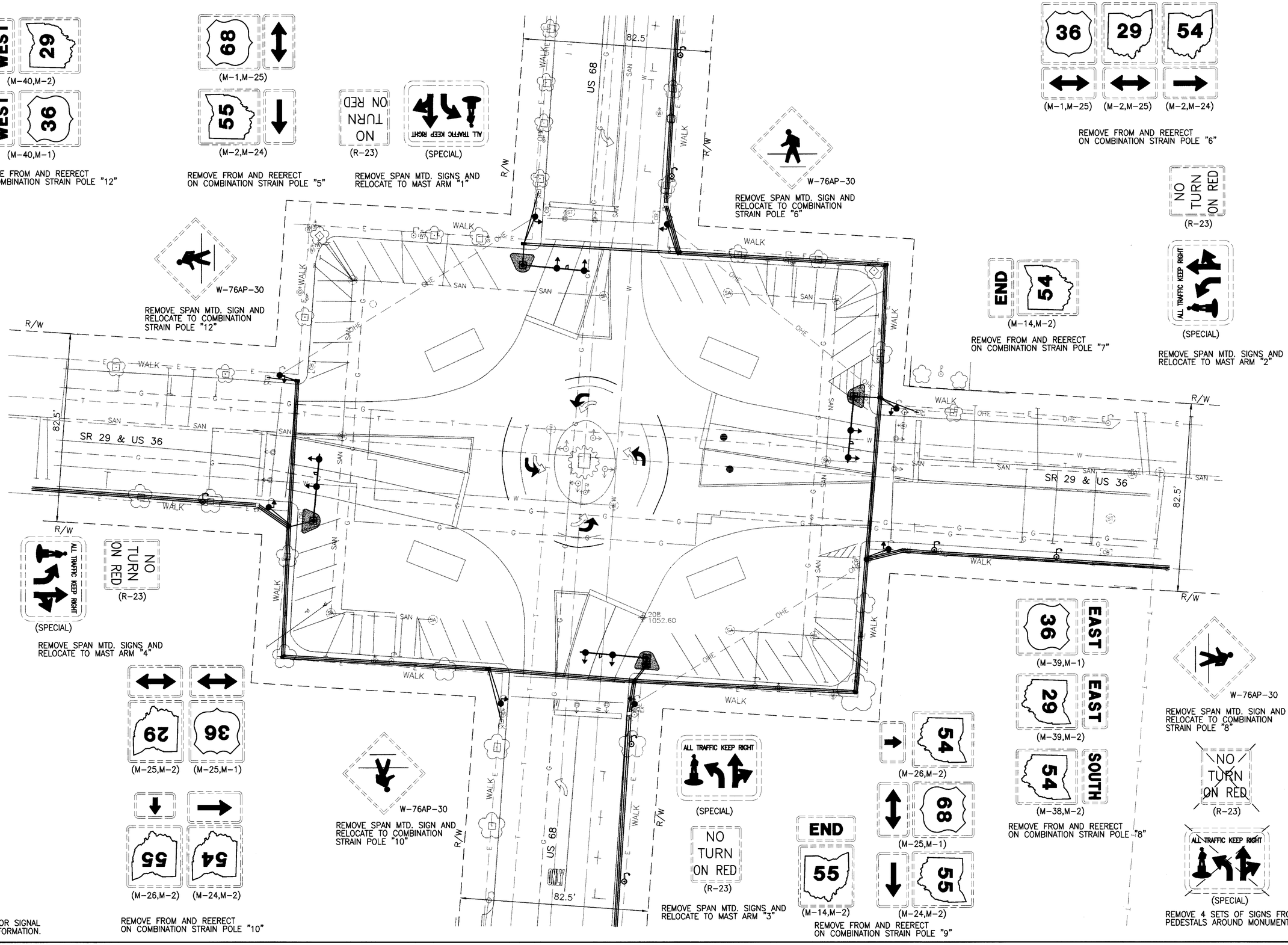

US 68 AND US 36 / SR 29
TRAFFIC SIGNAL PLAN

HORIZONTAL SCALE IN FEET
20 0 20

CALCULATED:
CHECKED:

CHP-36-14.23
PID NO. 20258

29
50

P:\98240002\DWG\signal\9802S13A.DWG.dwg - NOV 17, 1999 - 15:26:23

COORDINATION TIMING (SECONDS)

CYCLE/OFFSET	PHASE ø2	ø4	ø6	ø8	DESCRIPTION
60/0	33	27	33	27	12AM–6AM, 7 DAYS
75/0	40	35	40	35	6AM–10:30AM, M–F
75/0	40	35	40	35	10:30AM–7PM, M–F
70/0	37	33	37	33	7PM–12AM M–F 6AM–12AM, SA & SU

NOTES:
1. OFFSETS REFERENCED TO BEGINNING OF ø2 & ø6
2. ø2, ø4, ø6, & ø8 TO BE PROGRAMMED FOR DUAL ENTRY.

TIMING

PHASE	ø2	ø4	ø6	ø8
MOVEMENT	SB	WB	NB	EB
MIN. GREEN	20	20	20	20
VEHICLE EXTENSION	–	–	–	–
MAX_1	40	35	40	35
MAX_2	–	–	–	–
YELLOW	3.5	3.5	3.5	3.5
ALL RED	1.0	1.0	1.0	1.0
WALK	6	6	6	6
PED. CLEAR	12	12	12	12
RECALL	MAX	MAX	MAX	MAX
CALL TO NON–ACTUATED	1	2	1	2

REMOVAL OF TRAFFIC SIGNAL INSTALLATION

DESCRIPTION OF ITEM TO BE REMOVED BY CONTRACTOR	REMOVE AND SALVAGE	REMOVE AND DISPOSE
VEHICULAR SIGNAL HEADS (16)–3 SECTION, 1–WAY	X	
POLE MOUNTED CONTROL CABINET AND CONTROLLER	X	
(8) STRAIN POLES	X	
(4) PEDESTAL POLES	X	
CABLE & WIRE		X

TRAFFIC CONTROL QUANTITIES

ITEM	EXT.	QTY.	UNITS	DESCRIPTION
830	26000	148	LF	CURB, TYPE 6
608	10000	552	SF	4" CONCRETE WALK
625	25400	899	LF	CONDUIT, 2", 713.04
625	25402	847	LF	CONDUIT, 2", 713.07
625	25500	1524	LF	CONDUIT, 3", 713.04
625	29501	950	LF	TRENCH IN PAVED AREA, TYPE A, AS PER PLAN
625	29601	217	LF	TRENCH IN PAVED AREA, TYPE B
625	30700	7	EACH	PULL BOX, 713.08, 18"
625	30706	1	EACH	PULL BOX, 713.08, 24"
625	32000	4	EACH	GROUND ROD
630	79100	8	EACH	SIGN HANGER ASSEMBLY, MAST ARM
630	79500	4	EACH	SIGN SUPPORT ASSEMBLY, POLE MOUNTED
630	87100	12	EACH	REMOVAL OF OVERHEAD MOUNTED SIGN AND REERECTION
630	87500	8	EACH	REMOVAL OF POLE MOUNTED SIGN AND DISPOSAL
630	87520	38	EACH	REMOVAL OF POLE MOUNTED SIGN AND REERECTION
632	00300	8	EACH	VEHICULAR SIGNAL HEAD, 3 SECTION, 12" LENS, 1–WAY
632	20102	8	EACH	PEDESTRIAN SIGNAL HEAD, TYPE A2, AS PER PLAN
632	25000	8	EACH	COVERING OF VEHICULAR SIGNAL HEAD
632	40300	2157	LF	SIGNAL CABLE, 3 CONDUCTOR, NO. 14 AWG
632	40500	1239	LF	SIGNAL CABLE, 5 CONDUCTOR, NO. 14 AWG
632	53202	1216	LF	INTERCONNECT CABLE, 6 PAIR, NO. 19 AWG, SOLID, REA (PE–39)
632	64010	4	EACH	SIGNAL SUPPORT FOUNDATION
632	68200	32	LF	POWER CABLE, 2 CONDUCTOR, NO. 6 AWG
632	70001	1	EACH	POWER SERVICE, AS PER PLAN
632	80201	4	EACH	SIGNAL SUPPORT, TYPE TC–81.20, DESIGN 2, AS PER PLAN
632	84301	8	EACH	COMBINATION STRAIN POLE, TYPE TC–81.10, DESIGN 3, AS PER PLAN
632	90101	1	EACH	REMOVAL OF TRAFFIC SIGNAL INSTALLATION, AS PER PLAN
633	34001	1	EACH	CONTROLLER, ACTUATED, 4 PHASE, SOLID STATE DIGITAL MICROPROCESSOR, AS PER PLAN
633	70000	0.94	CY	CONCRETE FOR CABINET FOUNDATION
633	99000	1	EACH	CONTROLLER, MISC.: PREEMPTION (EACH), AS PER PLAN
642	00402	120	LF	CHANNELIZING LINE, TYPE 2
644	00500	116	LF	STOP LINE
644	01300	4	EACH	LANE ARROW
644	30000	240	LF	REMOVAL OF PAVEMENT MARKING
644	30020	4	EACH	REMOVAL OF PAVEMENT MARKING
633	99000	1	EACH	ALTERNATE BID: CONTROLLER, MISC.: PREEMPTION (EACH), AS PER PLAN

SIGNAL DISPLAY SCHEDULE

PHASE / SIGNAL	ø2 & ø6 R/W	CLEARANCE			ø4 & ø8 R/W	CLEARANCE			FLASH	PREEMPTION CALL SB R/W	CLEARANCE		PREEMPTION CALL WB R/W	CLEARANCE		PREEMPTION CALL NB R/W	CLEARANCE		PREEMPTION CALL EB R/W	CLEARANCE	
H1,H2	G	G	Y	R	R	R	R	R	R	G	Y	R	R	R	R	R	R	R	R	R	R
H3,H4	G	G	Y	R	R	R	R	R	R	R	R	R	R	R	R	G	Y	R	R	R	R
H5,H6	R	R	R	R	G	G	Y	R	R	R	R	R	R	R	R	R	R	R	G	Y	R
H7,H8	R	R	R	R	G	G	Y	R	R	R	R	R	G	Y	R	R	R	R	R	R	R
P1,P2, P3,P4	W	FDW	DW	DW	DW	DW	DW	DW	OFF	DW	DW	DW	DW	DW	DW	DW	DW	DW	DW	DW	DW
P5,P6, P7,P8	DW	DW	DW	DW	W	FDW	DW	DW	OFF	DW	DW	DW	DW	DW	DW	DW	DW	DW	DW	DW	DW

POLE ORIENTATION DATA CHART

SUPPORT NO.	POLE DESIGN NO.	MAST ARM DESIGN NO.	STATION & OFFSET	POLE HEIGHT (ft.)	PED SIGNALS	PED BUTTONS	HANDHOLE	CABLE ENTRANCE	POWER SERVICE	LUMINAIRE ARM	MAST ARM A ANGLE (DEG.)	MAST ARM B ANGLE (DEG.)	L (ft)	L1 (ft)	L2 (ft)	L3 (ft)	L4 (ft)	LUMINAIRE ARM LENGTH (ft)	CONTROLLER
MAST ARM 1	2	2	58+87.1, 33.1' LT. "A"	23	–	–	270	–	–	–	0	–	28	12	15	23	27	–	–
MAST ARM 2	2	2	58+39.9, 116.0' RT. "A"	23	–	–	270	–	–	–	0	–	28	12	15	23	27	–	–
MAST ARM 3	2	2	57+19.2, 33.6' RT. "A"	23	–	–	180	–	–	–	0	–	28	12	15	23	27	–	–
MAST ARM 4	2	2	57+68.9, 116.6' LT. "A"	23	–	–	270	–	–	–	0	–	28	12	15	23	27	–	–
STRAIN POLE 5	3	–	EX. FOUNDATION	30	270	–	180	–	–	180	–	–	–	–	–	–	–	8	–
STRAIN POLE 6	3	–	EX. FOUNDATION	30	90	–	180	–	–	180	–	–	–	–	–	–	–	8	–
STRAIN POLE 7	3	–	EX. FOUNDATION	30	270	–	90	–	–	180	–	–	–	–	–	–	–	8	–
STRAIN POLE 8	3	–	EX. FOUNDATION	30	90	–	270	–	–	180	–	–	–	–	–	–	–	8	–
STRAIN POLE 9	3	–	EX. FOUNDATION	30	270	–	180	–	90	180	–	–	–	–	–	–	–	8	–
STRAIN POLE 10	3	–	EX. FOUNDATION	30	90	–	180	–	–	180	–	–	–	–	–	–	–	8	–
STRAIN POLE 11	3	–	EX. FOUNDATION	30	270	–	90	–	–	180	–	–	–	–	–	–	–	8	–
STRAIN POLE 12	3	–	EX. FOUNDATION	30	90	–	270	–	–	180	–	–	–	–	–	–	–	8	–

NOTE:
ALL POLES ORIENTED FROM LINE "A" (US 68)

NOTE:
WIRING TO PREEMPTION DETECTORS IS AS SPECIFIED BY MANUFACTURER

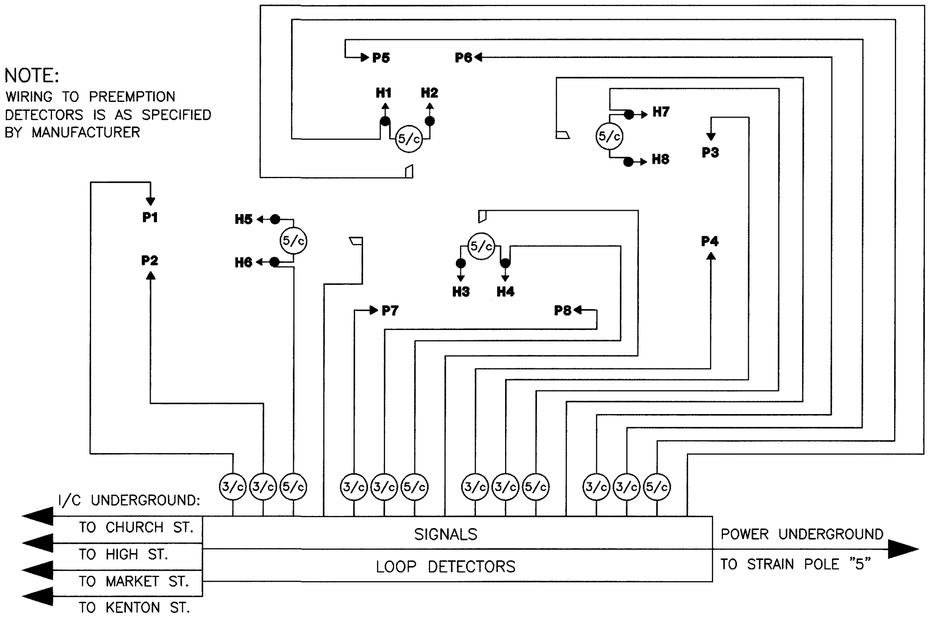

WIRING DIAGRAM

CALCULATED: : :
CHECKED: : :

US 68 AND US 36 / SR 29
TRAFFIC SIGNAL PLAN

CHP-36-14.23
PID NO. 20258

30
50

P:\98240002\DWG\signal\98027B13.DWG.dwg – NOV 18, 1999 – 16:53:53

PHASE DIAGRAM

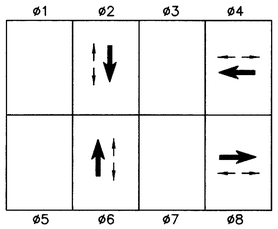

SIGNAL INDICATIONS

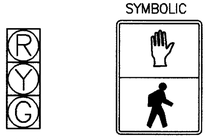

H1,H2,H3,H4,
H5,H6,H7,H8

P1,P2,P3,P4,
P5,P6,P7,P8

ALL INDICATIONS ARE 12"

(R-73A)

MOUNT ABOVE
ALL PUSHBUTTONS

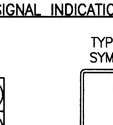

(R-26A)

REMOVE SPAN MTD. SIGN AND
RELOCATE ON MAST ARM "2".

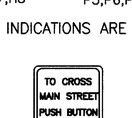

(N-29,IM-21-21)

REMOVE POLE MTD. SIGNS AND
RELOCATE ON MAST ARM SUPPORT "2".

(D-14)

(D-14)

REMOVE POLE MTD. STREET NAME SIGNS AND
RELOCATE ON MAST ARM SUPPORT "2".

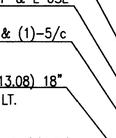

(SPECIAL)

REMOVE POLE MTD. SIGN
AND RELOCATE ON SUPPORT "2".

LUMINAIRE TO BE TRANSFERRED TO
COMBINATION SUPPORT "1" BY DP & L.

COMBINATION SUPPORT "1"
+33.3, 44.9' LT.

2" PVC CONDUIT FOR DP & L USE

2" CONDUIT W/(1)-7/c & (1)-5/c

PULL BOX (713.08) 18"
+30.1, 50.8' LT.

3" CONDUIT W/(1)-7/c & (1)-5/c

3" CONDUIT FOR DP & L USE

PULL BOX (713.09) 18"
+85.8, 38.9' LT.

2" CONDUIT W/(1)-7/c & (1)-5/c

MAST ARM SUPPORT "2"
+71.8, 30.3' LT.

3" CONDUIT W/(2)-7/c, (2)/-5/c & (1)-2/c

3" CONDUIT FOR DP & L USE

2" CONDUIT W/(1)-6 PAIR I/C, REA (PE-39)

3" CONDUIT FOR FUTURE USE

2" CONDUIT FOR DP & L USE

2" CONDUIT W/(1)-7/c & (1)-5/c

MAST ARM SUPPORT "3"
+44.9, 28.0' RT.

PULL BOX (713.08) 18"
+42.2, 25.8' RT.

3" CONDUIT W/(1)-7/c, (1)-5/c
(1)-2/c & (1)-6 PAIR I/C, REA (PE-39)

3" CONDUIT FOR DP & L USE

3" CONDUIT FOR FUTURE USE

LUMINAIRE TO BE TRANSFERRED TO
COMBINATION SUPPORT "4" BY DP & L

COMBINATION SUPPORT "4" W/POLE MTD
CONTROLLER & POWER SERVICE +85.5, 41.7' RT.

LUMINAIRE TO BE TRANSFERRED TO
COMBINATION SUPPORT "4" BY DP & L

3" CONDUIT W/(3)-7/c, (3)-5/c,
(2)-2/c & (2)-6 PAIR I/C, REA (PE-39)

PULL BOX (713.08) 18" , +84.3, 26.8' RT.

2" CONDUIT W/(1)-6 PAIR I/C, REA (PE-39)
3" CONDUIT FOR FUTURE USE
2" PVC CONDUIT FOR DP & L USE

NEW LIGHT POLE BY DP & L

2" CONDUIT W/(1)-6 PAIR I/C, REA (PE-39)

2" PVC CONDUIT FOR DP & L USE

3" CONDUIT FOR FUTURE USE

NEW LIGHT POLE BY DP & L

(R-26A)

REMOVE SPAN MTD. SIGN AND
RELOCATE ON MAST ARM "3".

OVERHEAD POWER BY ELECTRIC COMPANY

(SPECIAL)

REMOVE POLE MTD. SIGN
AND RELOCATE ON SUPPORT "4".

(D-14)

(D-14)

REMOVE POLE MTD. STREET NAME SIGNS AND
RELOCATE ON MAST ARM SUPPORT "3".

HORIZONTAL SCALE IN FEET
20 0 20

CALCULATED: --
CHECKED: --

US 68 AND COURT STREET
TRAFFIC SIGNAL PLAN

CHP-36-14.23
PID NO. 20258

31
50

P:\98240002\DWG\signal\9802SG16.DWG.dwg - NOV 18, 1999 - 16:57:11

DETECTOR ASSIGNMENTS

LOOP	SIZE	TURNS	MODE	MEMORY	(E)XTEND/(D)ELAY (SEC.)	UNIT	CHANNEL	PHASE
L-1	8' x 30'	2-4-2	PRESENCE	NON-LOCK	D-5	1	1	8
L-2	8' x 30'	2-4-2	PRESENCE	NON-LOCK	D-5	1	2	4

NOTES:
ALL LOOPS ARE QUADROPOLE

TIMING

PHASE	ø2	ø4	ø6	ø8
MOVEMENT	SB	WB	NB	EB
MIN. GREEN	20	10	20	10
VEHICLE EXTENSION	–	2.0	–	2.0
MAX 1	53	25	53	25
MAX 2	–	–	–	–
YELLOW	3.5	3.5	3.5	3.5
ALL RED	1.0	1.0	1.0	1.0
WALK	6	6	6	6
PED. CLEAR	10	11	10	11
RECALL	MIN	–	MIN	–
CALL TO NON-ACTUATED	1	–	1	–

REMOVAL OF TRAFFIC SIGNAL INSTALLATION

DESCRIPTION OF ITEM TO BE REMOVED BY CONTRACTOR	REMOVE AND SALVAGE	REMOVE AND DISPOSE
VEHICULAR SIGNAL HEADS (8)-3 SECTION, 1-WAY	X	
POLE MOUNTED CONTROL CABINET AND CONTROLLER	X	
(4) STRAIN POLES	X	
CABLE & WIRE		X

TRAFFIC CONTROL QUANTITIES

ITEM	EXT.	QTY.	UNITS	DESCRIPTION
625	25400	237	LF	CONDUIT, 2", 713.04
625	25402	220	LF	CONDUIT, 2", 713.07
625	25500	621	LF	CONDUIT, 3", 713.04
625	29501	248	LF	TRENCH IN PAVED AREA, TYPE A, AS PER PLAN
625	29601	166	LF	TRENCH IN PAVED AREA, TYPE B
625	30700	4	EACH	PULL BOX, 713.08, 18"
625	32000	4	EACH	GROUND ROD
630	79100	3	EACH	SIGN HANGER ASSEMBLY, MAST ARM
630	79500	10	EACH	SIGN SUPPORT ASSEMBLY, POLE MOUNTED
630	87100	4	EACH	REMOVAL OF OVERHEAD MOUNTED SIGN AND REERECTION
630	87520	6	EACH	REMOVAL OF POLE MOUNTED SIGN AND REERECTION
632	00300	8	EACH	VEHICULAR SIGNAL HEAD, 3 SECTION, 12" LENS, 1-WAY
632	20102	8	EACH	PEDESTRIAN SIGNAL HEAD, TYPE A2, AS PER PLAN
632	25000	8	EACH	COVERING OF VEHICULAR SIGNAL HEAD
632	26000	4	EACH	PEDESTRIAN PUSH BUTTON
632	26500	2	EACH	DETECTOR LOOP
632	27105	1	EACH	LOOP DETECTOR UNIT, 2 CHANNEL, DELAY AND EXTENSION TYPE, AS PER PLAN
632	40500	548	LF	SIGNAL CABLE, 5 CONDUCTOR, NO. 14 AWG
632	40700	415	LF	SIGNAL CABLE, 7 CONDUCTOR, NO. 14 AWG
632	53202	342	LF	INTERCONNECT CABLE, 6 PAIR, NO. 19 AWG, SOLID, REA (PE-39)
632	64010	4	EACH	SIGNAL SUPPORT FOUNDATION
632	65200	187	LF	LOOP DETECTOR LEAD-IN CABLE
632	68200	10	LF	POWER CABLE, 2 CONDUCTOR, NO. 6 AWG
632	70001	1	EACH	POWER SERVICE, AS PER PLAN
632	80201	2	EACH	SIGNAL SUPPORT, TYPE TC-81.20, DESIGN 2, AS PER PLAN
632	81101	2	EACH	COMBINATION SIGNAL SUPPORT, TYPE TC-81.20, DESIGN 1, AS PER PLAN
632	90101	1	EACH	REMOVAL OF TRAFFIC SIGNAL INSTALLATION, AS PER PLAN
633	38001	1	EACH	CONTROLLER, ACTUATED, 8 PHASE, SOLID STATE DIGITAL MICROPROCESSOR, AS PER PLAN
633	99000	1	EACH	CONTROLLER, MISC.: PREEMPTION, AS PER PLAN
642	00302	0.02	MILE	CENTER LINE, TYPE 2
642	00602	393	LF	CROSSWALK LINE, TYPE 2
644	00500	40	LF	STOP LINE
633	99000	1	EACH	ALTERNATE BID: CONTROLLER, MISC.: PREEMPTION, AS PER PLAN

COORDINATION TIMING (SECONDS)

CYCLE/OFFSET	PHASE ø2	PHASE ø4	PHASE ø6	PHASE ø8	DESCRIPTION
60/55	35	25	35	25	12AM-6AM, 7 DAYS
75/52	53	22	53	22	6AM-10:30AM, M-F
75/65	53	22	53	22	10:30AM-7PM, M-F
70/2	45	25	45	25	7PM-12AM M-F 6AM-12AM, SA & SU

NOTES:
1. OFFSETS REFERENCED TO BEGINNING OF ø2 & ø6
2. ø2, ø4, ø6, & ø8 TO BE PROGRAMMED FOR DUAL ENTRY.

SIGNAL DISPLAY SCHEDULE

PHASE / SIGNAL	ø2 & ø6 R/W	ø2 & ø6 CLEARANCE			ø4 & ø8 R/W	ø4 & ø8 CLEARANCE			FLASH	PREEMPTION CALL SB R/W	PREEMPTION CALL SB CLEARANCE		PREEMPTION CALL WB R/W	PREEMPTION CALL WB CLEARANCE		PREEMPTION CALL NB R/W	PREEMPTION CALL NB CLEARANCE		PREEMPTION CALL EB R/W	PREEMPTION CALL EB CLEARANCE	
H1,H2	G	G	Y	R	R	R	R	R	Y	R	R	R	R	R	R	G	Y	R	R	R	R
H3,H4	G	G	Y	R	R	R	R	R	Y	G	Y	R	R	R	R	R	R	R	R	R	R
H5,H6	R	R	R	R	G	G	Y	R	R	R	R	R	G	Y	R	R	R	R	R	R	R
H7,H8	R	R	R	R	G	G	Y	R	R	R	R	R	R	R	R	R	R	R	G	Y	R
P1,P2, P3,P4	W	FDW	DW	DW	DW	DW	DW	DW	OFF	DW	DW	DW	DW	DW	DW	DW	DW	DW	DW	DW	DW
P5,P6, P7,P8	DW	DW	DW	DW	W	FDW	DW	DW	OFF	DW	DW	DW	DW	DW	DW	DW	DW	DW	DW	DW	DW

POLE ORIENTATION DATA CHART

SUPPORT NO.	POLE DESIGN NO.	MAST ARM DESIGN NO.	STATION & OFFSET	POLE HEIGHT (ft.)	PED SIGNALS	PED BUTTONS	HANDHOLE	CABLE ENTRANCE	POWER SERVICE	LUMINAIRE ARM	MAST ARM A ANGLE (DEG.)	MAST ARM B ANGLE (DEG.)	L (ft)	L1 (ft)	L2 (ft)	L3 (ft)	LUMINAIRE ARM LENGTH (ft)	CONTROLLER
MAST ARM 1	1	1	62+33.3, 44.9' LT.	30	180/270	180	180	–	–	270	90	–	23	12	22	–	20	–
MAST ARM 2	2	2	61+71.8, 30.3' LT.	23	180/270	270	180	–	–	–	0	–	30	11	23	29	–	–
MAST ARM 3	2	2	62+44.9, 28.0' RT.	23	180/270	270	180	–	–	–	0	–	30	11	23	29	–	–
MAST ARM 4	1	1	61+85.5, 41.1' RT.	30	180/270	180	180	–	120	270	90	–	23	12	22	–	20	90

WIRING DIAGRAM

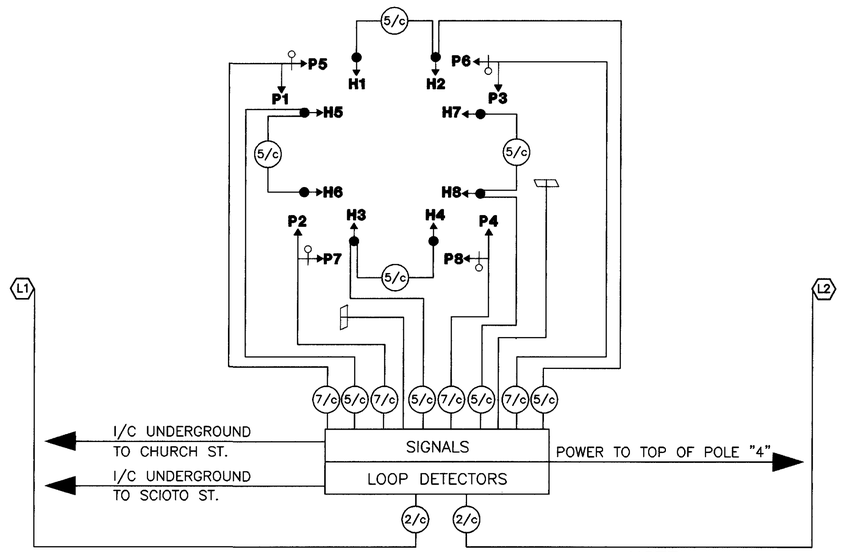

NOTE:
WIRING TO PREEMPTION DETECTORS IS AS SPECIFIED BY MANUFACTURER

CALCULATED: ::
CHECKED: ::

US 68 AND CHURCH COURT STREET
TRAFFIC SIGNAL PLAN

CHP-36-14.23
PID NO. 20258

32
50

P:\98240002\DWG\signal\98027B16.DWG - NOV 18, 1999 - 15:22:53

PHASE DIAGRAM

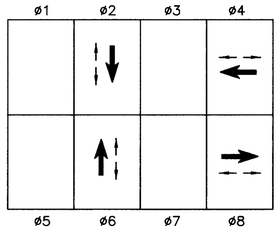

SIGNAL INDICATIONS

H1,H2,H3,H4,
H5,H6,H7,H8

TYPE A2
SYMBOLIC

P1,P2,P3,P4,
P5,P6,P7,P8

ALL INDICATIONS ARE 12"

(R-73A)

MOUNT ABOVE
ALL PUSHBUTTONS

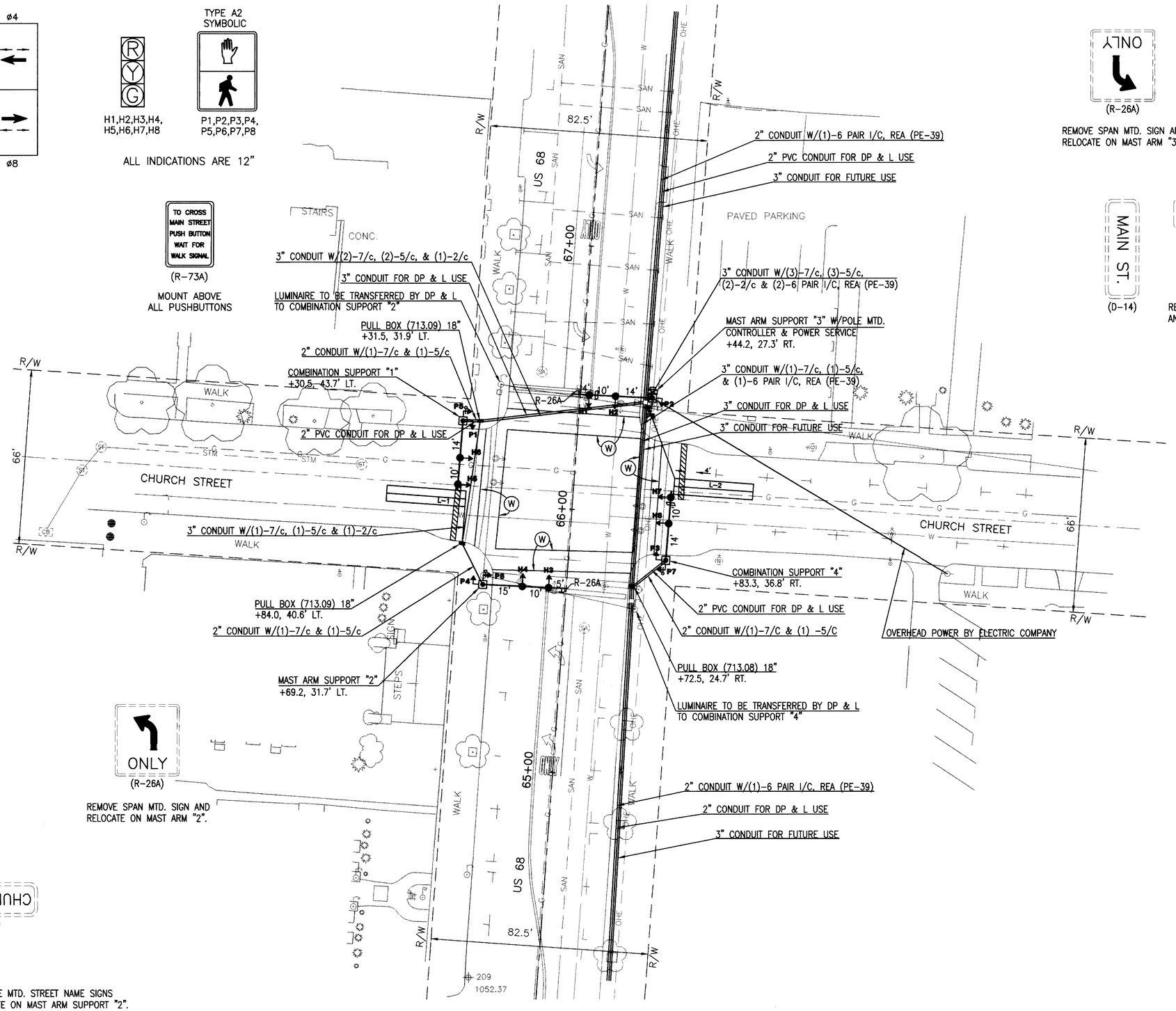

3" CONDUIT W/(2)-7/c, (2)-5/c, & (1)-2/c

3" CONDUIT FOR DP & L USE

LUMINAIRE TO BE TRANSFERRED BY DP & L
TO COMBINATION SUPPORT "2"

PULL BOX (713.09) 18"
+31.5, 31.9' LT.

2" CONDUIT W/(1)-7/c & (1)-5/c

COMBINATION SUPPORT "1"
+30.5, 43.7' LT.

2" PVC CONDUIT FOR DP & L USE

3" CONDUIT W/(1)-7/c, (1)-5/c & (1)-2/c

PULL BOX (713.09) 18"
+84.0, 40.6' LT.

2" CONDUIT W/(1)-7/c & (1)-5/c

MAST ARM SUPPORT "2"
+69.2, 31.7' LT.

2" CONDUIT W/(1)-6 PAIR I/C, REA (PE-39)

2" PVC CONDUIT FOR DP & L USE

3" CONDUIT FOR FUTURE USE

3" CONDUIT W/(3)-7/c, (3)-5/c,
(2)-2/c & (2)-6 PAIR I/C, REA (PE-39)

MAST ARM SUPPORT "3" W/POLE MTD.
CONTROLLER & POWER SERVICE
+44.2, 27.3' RT.

3" CONDUIT W/(1)-7/c, (1)-5/c,
& (1)-6 PAIR I/C, REA (PE-39)

3" CONDUIT FOR DP & L USE

3" CONDUIT FOR FUTURE USE

COMBINATION SUPPORT "4"
+83.3, 36.8' RT.

2" PVC CONDUIT FOR DP & L USE

2" CONDUIT W/(1)-7/C & (1) -5/C

PULL BOX (713.08) 18"
+72.5, 24.7' RT.

LUMINAIRE TO BE TRANSFERRED BY DP & L
TO COMBINATION SUPPORT "4"

2" CONDUIT W/(1)-6 PAIR I/C, REA (PE-39)

2" CONDUIT FOR DP & L USE

3" CONDUIT FOR FUTURE USE

OVERHEAD POWER BY ELECTRIC COMPANY

ONLY
(R-26A)

REMOVE SPAN MTD. SIGN AND
RELOCATE ON MAST ARM "2".

MAIN ST.
(D-14)

CHURCH ST.
(D-14)

REMOVE POLE MTD. STREET NAME SIGNS
AND RELOCATE ON MAST ARM SUPPORT "2".

ONLY
(R-26A)

REMOVE SPAN MTD. SIGN AND
RELOCATE ON MAST ARM "3".

MAIN ST.
(D-14)

CHURCH ST.
(D-14)

REMOVE POLE MTD. STREET NAME SIGNS
AND RELOCATE ON MAST ARM SUPPORT "3".

HORIZONTAL
SCALE IN FEET
20 0 20

CALCULATED: --
CHECKED: --

US 68 AND CHURCH STREET
TRAFFIC SIGNAL PLAN

CHP-36-14.23
PID NO. 20258

33
50

P:\98240002\DWG\signal\9802SG17.DWG.dwg - NOV 18, 1999 - 20:08:09

DETECTOR ASSIGNMENTS

LOOP	SIZE	TURNS	MODE	MEMORY	(E)XTEND/(D)ELAY (SEC.)	UNIT	CHANNEL	PHASE
L-1	6' x 30'	2-4-2	PRESENCE	NON-LOCK	D-5	1	1	8
L-2	6' x 30'	2-4-2	PRESENCE	NON-LOCK	D-5	1	2	4

NOTES:
ALL LOOPS ARE QUADROPOLE

TIMING

PHASE	ø2	ø4	ø6	ø8
MOVEMENT	SB	WB	NB	EB
MIN. GREEN	20	10	20	10
VEHICLE EXTENSION	–	2.0	–	2.0
MAX 1	53	25	53	25
MAX 2	–	–	–	–
YELLOW	3.5	3.5	3.5	3.5
ALL RED	1.0	1.0	1.0	1.0
WALK	6	6	6	6
PED. CLEAR	10	11	10	11
RECALL	MIN	–	MIN	–
CALL TO NON-ACTUATED	1	–	1	–

REMOVAL OF TRAFFIC SIGNAL INSTALLATION

DESCRIPTION OF ITEM TO BE REMOVED BY CONTRACTOR	REMOVE AND SALVAGE	REMOVE AND DISPOSE
VEHICULAR SIGNAL HEADS (8)-3 SECTION, 1-WAY	X	
POLE MOUNTED CONTROL CABINET AND CONTROLLER	X	
(4) STRAIN POLES	X	
CABLE & WIRE		X

TRAFFIC CONTROL QUANTITIES

ITEM	EXT.	QTY.	UNITS	DESCRIPTION
625	25400	247	LF	CONDUIT, 2", 713.04
625	25402	230	LF	CONDUIT, 2", 713.07
625	25500	588	LF	CONDUIT, 3", 713.04
625	29501	249	LF	TRENCH IN PAVED AREA, TYPE A, AS PER PLAN
625	29601	175	LF	TRENCH IN PAVED AREA, TYPE B
625	30700	3	EACH	PULL BOX, 713.08, 18"
625	32000	4	EACH	GROUND ROD
630	79100	2	EACH	SIGN HANGER ASSEMBLY, MAST ARM
630	79500	8	EACH	SIGN SUPPORT ASSEMBLY, POLE MOUNTED
630	87100	2	EACH	REMOVAL OF OVERHEAD MOUNTED SIGN AND REERECTION
630	87520	4	EACH	REMOVAL OF POLE MOUNTED SIGN AND REERECTION
632	00300	8	EACH	VEHICULAR SIGNAL HEAD, 3 SECTION, 12" LENS, 1-WAY
632	20102	8	EACH	PEDESTRIAN SIGNAL HEAD, TYPE A2, AS PER PLAN
632	25000	8	EACH	COVERING OF VEHICULAR SIGNAL HEAD
632	26000	4	EACH	PEDESTRIAN PUSH BUTTON
632	26500	2	EACH	DETECTOR LOOP
632	27105	1	EACH	LOOP DETECTOR UNIT, 2 CHANNEL, DELAY AND EXTENSION TYPE, AS PER PLAN
632	40500	514	LF	SIGNAL CABLE, 5 CONDUCTOR, NO. 14 AWG
632	40700	419	LF	SIGNAL CABLE, 7 CONDUCTOR, NO. 14 AWG
632	53202	326	LF	INTERCONNECT CABLE, 6 PAIR, NO. 19 AWG, SOLID, REA (PE-39)
632	64010	4	EACH	SIGNAL SUPPORT FOUNDATION
632	65200	122	LF	LOOP DETECTOR LEAD-IN CABLE
632	68200	10	LF	POWER CABLE, 2 CONDUCTOR, NO. 6 AWG
632	70001	1	EACH	POWER SERVICE, AS PER PLAN
632	80201	2	EACH	SIGNAL SUPPORT, TYPE TC-81.20, DESIGN 2, AS PER PLAN
632	81201	2	EACH	COMBINATION SIGNAL SUPPORT, TYPE TC-81.20, DESIGN 2, AS PER PLAN
632	90101	1	EACH	REMOVAL OF TRAFFIC SIGNAL INSTALLATION, AS PER PLAN
633	38001	1	EACH	CONTROLLER, ACTUATED, 8 PHASE, SOLID STATE DIGITAL MICROPROCESSOR, AS PER PLAN
633	99000	1	EACH	CONTROLLER, MISC.: PREEMPTION, AS PER PLAN
642	00602	394	LF	CROSSWALK LINE, TYPE 2
644	00500	42	LF	STOP LINE
644	30000	21	LF	REMOVAL OF PAVEMENT MARKING
633	99000	1	EACH	ALTERNATE BID: CONTROLLER, MISC.: PREEMPTION, AS PER PLAN

COORDINATION TIMING (SECONDS)

CYCLE/OFFSET	PHASE ø2	PHASE ø4	PHASE ø6	PHASE ø8	DESCRIPTION
60/0	35	25	35	25	12AM-6AM, 7 DAYS
75/52	53	22	53	22	6AM-10:30AM, M-F
75/58	53	22	53	22	10:30AM-7PM, M-F
70/62	45	25	45	25	7PM-12AM M-F 6AM-12AM, SA & SU

NOTES:
1. OFFSETS REFERENCED TO BEGINNING OF ø2 & ø6
2. ø2, ø4, ø6, & ø8 TO BE PROGRAMMED FOR DUAL ENTRY.

SIGNAL DISPLAY SCHEDULE

PHASE / SIGNAL	ø2 & ø6 R/W	ø2 & ø6 CLEARANCE			ø4 & ø8 R/W	ø4 & ø8 CLEARANCE			FLASH	PREEMPTION CALL SB R/W	PREEMPTION CALL SB CLEARANCE		PREEMPTION CALL WB R/W	PREEMPTION CALL WB CLEARANCE		PREEMPTION CALL NB R/W	PREEMPTION CALL NB CLEARANCE		PREEMPTION CALL EB R/W	PREEMPTION CALL EB CLEARANCE	
H1,H2	G	G	Y	R	R	R	R	R	Y	R	R	R	R	R	R	G	Y	R	R	R	R
H3,H4	G	G	Y	R	R	R	R	R	Y	G	Y	R	R	R	R	R	R	R	R	R	R
H5,H6	R	R	R	R	G	G	Y	R	R	R	R	R	G	Y	R	R	R	R	R	R	R
H7,H8	R	R	R	R	G	G	Y	R	R	R	R	R	R	R	R	R	R	R	G	Y	R
P1,P2, P3,P4	W	FDW	DW	DW	DW	DW	DW	DW	OFF	DW	DW	DW	DW	DW	DW	DW	DW	DW	DW	DW	DW
P5,P6, P7,P8	DW	DW	DW	DW	W	FDW	DW	DW	OFF	DW	DW	DW	DW	DW	DW	DW	DW	DW	DW	DW	DW

POLE ORIENTATION DATA CHART

SUPPORT NO.	POLE DESIGN NO.	MAST ARM DESIGN NO.	STATION & OFFSET	POLE HEIGHT (ft.)	PED SIGNALS	PED BUTTONS	HANDHOLE	CABLE ENTRANCE	POWER SERVICE	LUMINAIRE ARM	MAST ARM A ANGLE (DEG.)	MAST ARM B ANGLE (DEG.)	L (ft)	L1 (ft)	L2 (ft)	L3 (ft)	LUMINAIRE ARM LENGTH (ft)	CONTROLLER
MAST ARM 1	2	2	66+30.5, 43.7' LT.	30	180/270	180	180	–	–	270	90	–	25	14	24	–	20	–
MAST ARM 2	2	2	65+69.2, 31.7' LT.	23	180/270	270	180	–	–	–	0	–	31	15	25	30	–	–
MAST ARM 3	2	2	66+44.2, 27.3' RT.	23	180/270	270	180	–	180	–	0	–	29	14	24	28	–	90
MAST ARM 4	2	2	65+83.3, 36.8' RT.	30	180/270	180	180	–	–	270	90	–	25	14	24	–	20	–

WIRING DIAGRAM

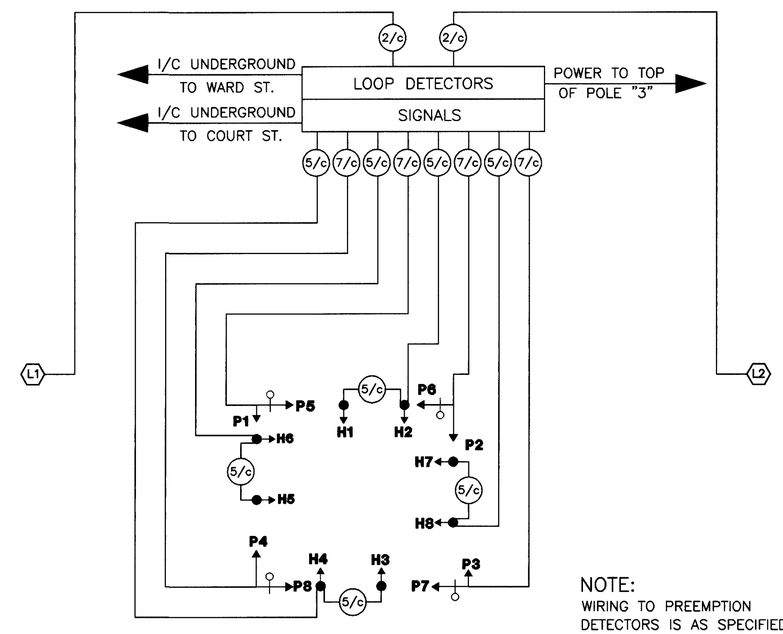

NOTE:
WIRING TO PREEMPTION DETECTORS IS AS SPECIFIED BY MANUFACTURER

CALCULATED: : :
CHECKED: : :

US 68 AND CHURCH STREET
TRAFFIC SIGNAL PLAN

CHP-36-14.23
PID NO. 20258

34
50

P:\98240002\DWG\signal\9802TB17.DWG.dwg - NOV 18, 1999 - 15:25:54

PHASE DIAGRAM

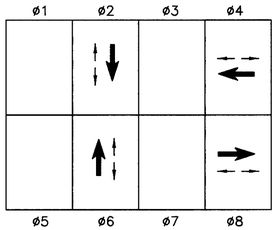

SIGNAL INDICATIONS

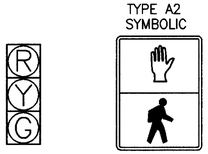

H1,H2,H3,H4,
H5,H6,H7,H8

P1,P2,P3,P4,
P5,P6,P7,P8

ALL INDICATIONS ARE 12"

(R-73A)

MOUNT ABOVE
ALL PUSHBUTTONS

(R-26A)

(W-76AH)

REMOVE EXISTING SPAN MTD. SIGNS
AND RELOCATE TO MAST ARM "3".

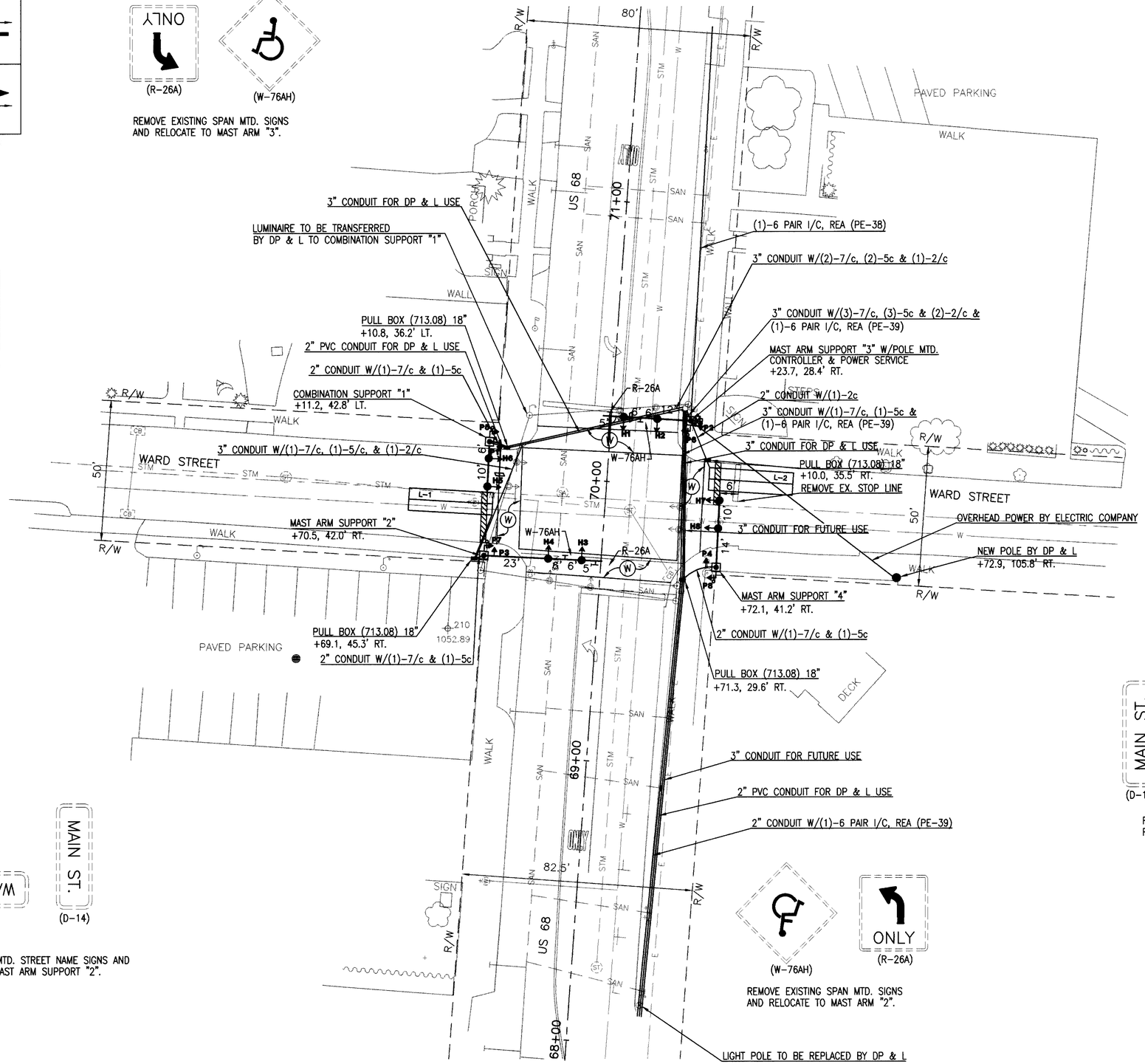

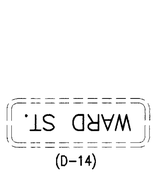

REMOVE POLE MTD. STREET NAME SIGNS AND
RELOCATE TO MAST ARM SUPPORT "2".

(W-76AH)

(R-26A)

REMOVE EXISTING SPAN MTD. SIGNS
AND RELOCATE TO MAST ARM "2".

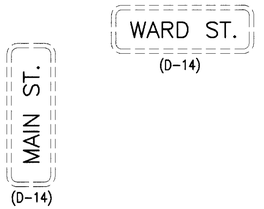

REMOVE POLE MTD. STREET NAME SIGNS AND
RELOCATE TO MAST ARM SUPPORT "3".

HORIZONTAL
SCALE IN FEET
20 0 20

CALCULATED: --- CHECKED: ---

US 68 AND WARD STREET
TRAFFIC SIGNAL PLAN

CHP-36-14.23
PID NO. 20258

35
50

P:\98240002\DWG\signal\9802SG18.DWG.dwg - NOV 18, 1999 - 20:06:50

DETECTOR ASSIGNMENTS

LOOP	SIZE	TURNS	MODE	MEMORY	(E)XTEND/ (D)ELAY (SEC.)	UNIT	CHANNEL	PHASE
L–1	8' x 30'	2–4–2	PRESENCE	NON–LOCK	D–5	1	1	8
L–2	8' x 30'	2–4–2	PRESENCE	NON–LOCK	D–5	1	2	4

NOTES:
ALL LOOPS ARE QUADROPOLE

TIMING

PHASE	ø2	ø4	ø6	ø8
MOVEMENT	SB	WB	NB	EB
MIN. GREEN	20	10	20	10
VEHICLE EXTENSION	–	2.0	–	2.0
MAX 1	53	25	53	25
MAX 2	–	–	–	–
YELLOW	3.5	3.5	3.5	3.5
ALL RED	1.0	1.0	1.0	1.0
WALK	6	6	6	6
PED. CLEAR	10	11	10	11
RECALL	MIN	–	MIN	–
CALL TO NON–ACTUATED	1	–	1	–

COORDINATION TIMING (SECONDS)

CYCLE/OFFSET	PHASE ø2	ø4	ø6	ø8	DESCRIPTION
60/30	35	25	35	25	12AM–6AM, 7 DAYS
75/44	53	22	53	22	6AM–10:30AM, M–F
75/50	53	22	53	22	10:30AM–7PM, M–F
70/60	45	25	45	25	7PM–12AM M–F 6AM–12AM, SA & SU

NOTES:
1. OFFSETS REFERENCED TO BEGINNING OF ø2 & ø6
2. ø2, ø4, ø6, & ø8 TO BE PROGRAMMED FOR DUAL ENTRY.

REMOVAL OF TRAFFIC SIGNAL INSTALLATION

DESCRIPTION OF ITEM TO BE REMOVED BY CONTRACTOR	REMOVE AND SALVAGE	REMOVE AND DISPOSE
VEHICULAR SIGNAL HEADS (8)–3 SECTION, 1–WAY	X	
POLE MOUNTED CONTROL CABINET AND CONTROLLER	X	
(4) STRAIN POLES	X	
CABLE & WIRE		X

TRAFFIC CONTROL QUANTITIES

ITEM	EXT.	QTY.	UNITS	DESCRIPTION
625	25400	157	LF	CONDUIT, 2", 713.04
625	25402	130	LF	CONDUIT, 2", 713.07
625	25500	445	LF	CONDUIT, 3", 713.04
625	29501	175	LF	TRENCH IN PAVED AREA, TYPE A, AS PER PLAN
625	29601	134	LF	TRENCH IN PAVED AREA, TYPE B
625	30700	3	EACH	PULL BOX, 713.08, 18"
625	32000	4	EACH	GROUND ROD
630	79100	4	EACH	SIGN HANGER ASSEMBLY, MAST ARM
630	79500	8	EACH	SIGN SUPPORT ASSEMBLY, POLE MOUNTED
630	87100	4	EACH	REMOVAL OF OVERHEAD MOUNTED SIGN AND REERECTION
630	87520	4	EACH	REMOVAL OF POLE MOUNTED SIGN AND REERECTION
632	00300	8	EACH	VEHICULAR SIGNAL HEAD, 3 SECTION, 12" LENS, 1–WAY
632	20102	8	EACH	PEDESTRIAN SIGNAL HEAD, TYPE A2, AS PER PLAN
632	25000	8	EACH	COVERING OF VEHICULAR SIGNAL HEAD
632	26000	4	EACH	PEDESTRIAN PUSH BUTTON
632	26500	2	EACH	DETECTOR LOOP
632	27105	1	EACH	LOOP DETECTOR UNIT, 2 CHANNEL, DELAY AND EXTENSION TYPE, AS PER PLAN
632	40500	580	LF	SIGNAL CABLE, 5 CONDUCTOR, NO. 14 AWG
632	40700	386	LF	SIGNAL CABLE, 7 CONDUCTOR, NO. 14 AWG
632	53202	193	LF	INTERCONNECT CABLE, 6 PAIR, NO. 19 AWG, SOLID, REA (PE–39)
632	62803	142	LF	INTERCONNECT CABLE, INTEGRAL MESSENGER WIRE TYPE, 6 PAIR, NO. 19 AWG, SOLID, REA (PE–38), AS PER PLAN
632	64010	4	EACH	SIGNAL SUPPORT FOUNDATION
632	65200	164	LF	LOOP DETECTOR LEAD–IN CABLE
632	68200	20	LF	POWER CABLE, 2 CONDUCTOR, NO. 6 AWG
632	70001	1	EACH	POWER SERVICE, AS PER PLAN
632	80201	2	EACH	SIGNAL SUPPORT, TYPE TC–81.20, DESIGN 2 , AS PER PLAN
632	80501	1	EACH	SIGNAL SUPPORT, TYPE TC–81.20, DESIGN 11, AS PER PLAN
632	81101	1	EACH	COMBINATION SIGNAL SUPPORT, TYPE TC–81.20, DESIGN 1, AS PER PLAN
632	90101	1	EACH	REMOVAL OF TRAFFIC SIGNAL INSTALLATION, AS PER PLAN
633	38001	1	EACH	CONTROLLER, ACTUATED, 8 PHASE, SOLID STATE DIGITAL MICROPROCESSOR, AS PER PLAN
633	99000	1	EACH	CONTROLLER, MISC.: PREEMPTION, AS PER PLAN
642	00602	353	LF	CROSSWALK LINE, TYPE 2
644	00500	32	LF	STOP LINE
644	30000	12	LF	REMOVAL OF PAVEMENT MARKING
633	99000	1	EACH	ALTERNATE BID: CONTROLLER, MISC.: PREEMPTION, AS PER PLAN

SIGNAL DISPLAY SCHEDULE

PHASE / SIGNAL	ø2 & ø6 R/W	CLEARANCE			ø4 & ø8 R/W	CLEARANCE			FLASH	PREEMPTION CALL SB R/W	CLEARANCE		PREEMPTION CALL WB R/W	CLEARANCE		PREEMPTION CALL NB R/W	CLEARANCE		PREEMPTION CALL EB R/W	CLEARANCE	
H1,H2	G	G	Y	R	R	R	R	R	Y	R	R	R	R	R	R	G	Y	R	R	R	R
H3,H4	G	G	Y	R	R	R	R	R	Y	G	Y	R	R	R	R	R	R	R	R	R	R
H5,H6	R	R	R	R	G	G	Y	R	R	R	R	R	G	Y	R	R	R	R	R	R	R
H7,H8	R	R	R	R	G	G	Y	R	R	R	R	R	R	R	R	R	R	R	G	Y	R
P1,P2, P3,P4	W	FDW	DW	DW	DW	DW	DW	DW	OFF	DW	DW	DW	DW	DW	DW	DW	DW	DW	DW	DW	DW
P5,P6, P7,P8	DW	DW	DW	DW	W	FDW	DW	DW	OFF	DW	DW	DW	DW	DW	DW	DW	DW	DW	DW	DW	DW

POLE ORIENTATION DATA CHART

SUPPORT NO.	POLE DESIGN NO.	MAST ARM DESIGN NO.	STATION & OFFSET	POLE HEIGHT (ft.)	PED SIGNALS	PED BUTTONS	HANDHOLE	CABLE ENTRANCE	POWER SERVICE	LUMINAIRE ARM	MAST ARM A ANGLE (DEG.)	MAST ARM B ANGLE (DEG.)	L (ft)	L1 (ft)	L2 (ft)	L3 (ft)	L4 (ft)	LUMINAIRE ARM LENGTH (ft)	CONTROLLER
MAST ARM 1	1	1	70+11.2, 42.8' LT.	30	180/270	180	180	–	–	270	90	–	17	6	16	–	–	20	–
MAST ARM 2	11	11	69+70.5, 42.0' RT.	23	0/270	270	180	–	–	–	0	–	41	23	29	35	40	–	–
MAST ARM 3	2	2	70+23.7, 28.4' RT.	23	180/270	270	180	180	90	–	0	–	30	12	18	24	29	–	180
MAST ARM 4	2	2	69+72.1, 41.2' RT.	23	180/270	180	90	–	–	–	90	–	25	14	24	–	–	–	–

WIRING DIAGRAM

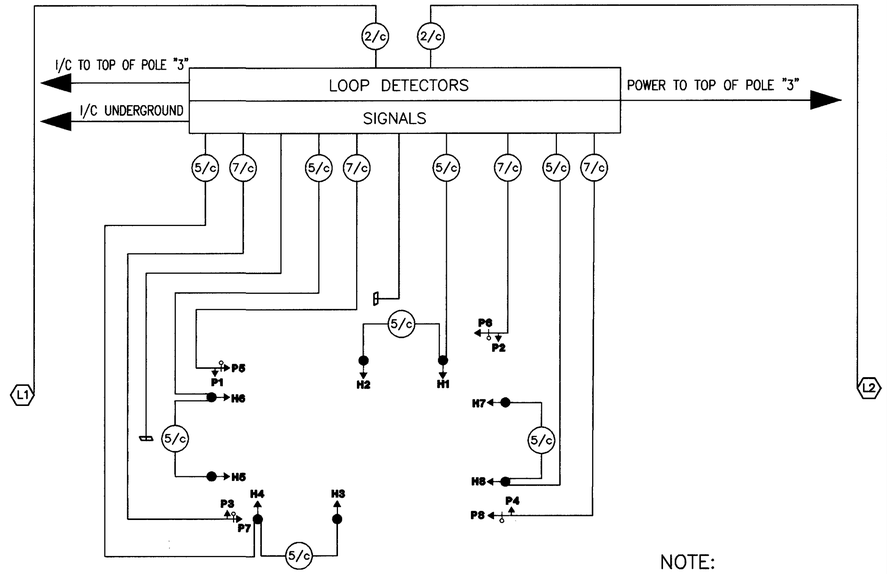

NOTE:
WIRING TO PREEMPTION DETECTORS IS AS SPECIFIED BY MANUFACTURER

CALCULATED: : :
CHECKED: : :

US 68 AND WARD STREET
TRAFFIC SIGNAL PLAN

CHP-36-14.23
PID NO. 20258

36
50

P:\98240002\DWG\signal\9802TB18.DWG.dwg – NOV 18, 1999 – 15:29:41

PHASE DIAGRAM

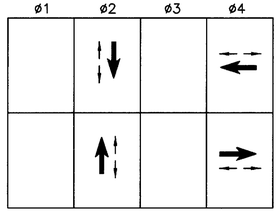

SIGNAL INDICATIONS

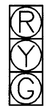

H1,H2,H3,H4,
H5,H6,H7,H8

TYPE A2 SYMBOLIC

P1,P2,P3,P4,
P5,P6,P7,P8

ALL INDICATIONS ARE 12"

(R-73A)

MOUNT ABOVE
ALL PUSHBUTTONS

(R-26A)

REMOVE EXISTING SPAN MTD. SIGN &
RELOCATE TO MAST ARM "2".

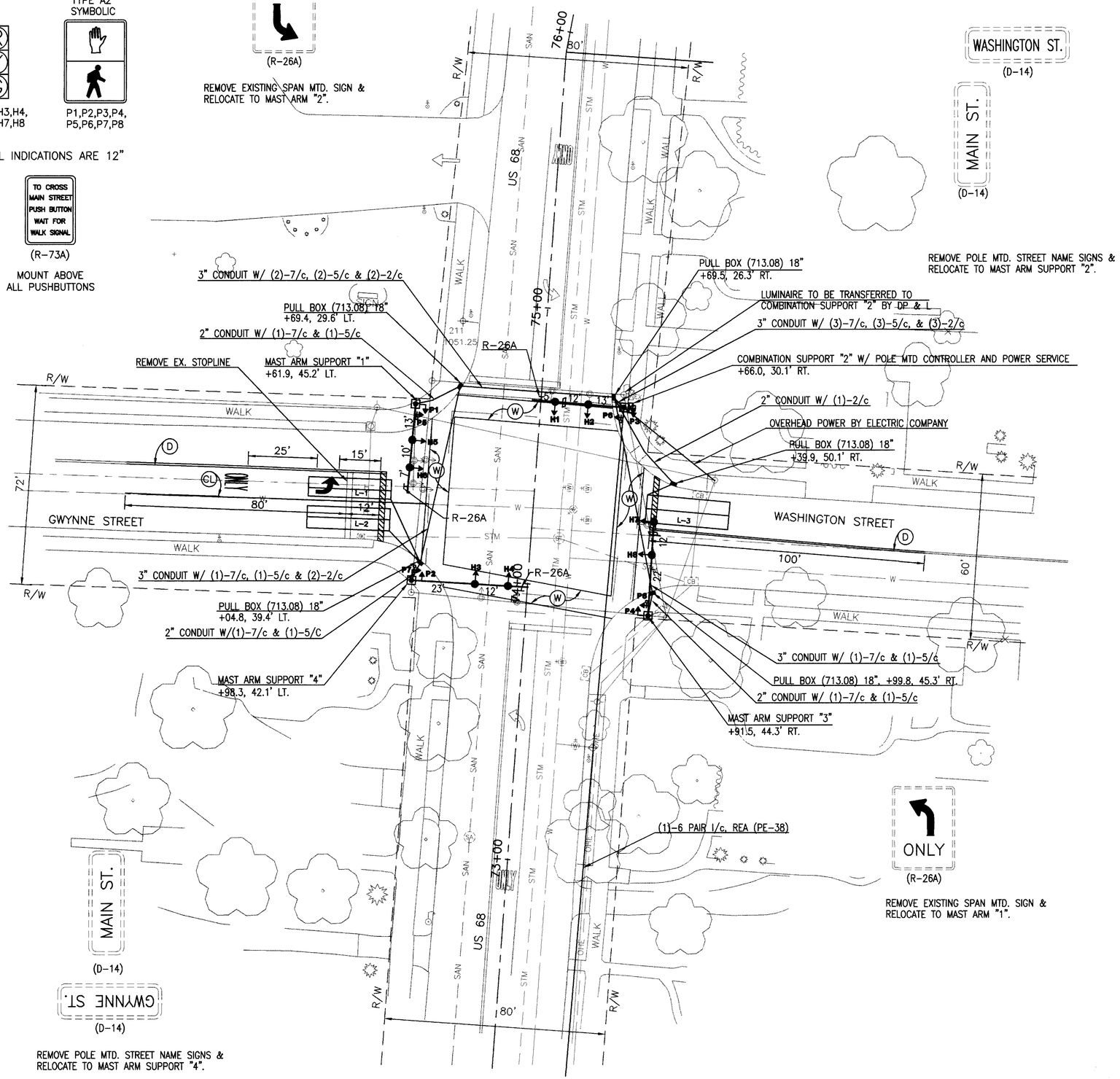

HORIZONTAL SCALE IN FEET
20 0 20

CALCULATED: --
CHECKED: --

US 68 AND WASHINGTON STREET
TRAFFIC SIGNAL PLAN

CHP-36-14.23
PID NO. 20258

37
50

P:\98240002\DWG\signal\9802SG19.DWG.dwg - NOV 18, 1999 - 15:31:21

DETECTOR ASSIGNMENTS

LOOP	SIZE	TURNS	MODE	MEMORY	(E)XTEND/ (D)ELAY (SEC.)	UNIT	CHANNEL	PHASE
L-1	7' x 30'	2-4-2	PRESENCE	NON-LOCK	D-5	1	1	8
L-2	8' x 30'	2-4-2	PRESENCE	NON-LOCK	D-5	1	2	8
L-3	10' x 30'	2-4-2	PRESENCE	NON-LOCK	D-5	2	1	4

NOTES:
ALL LOOPS ARE QUADROPOLE

TIMING

PHASE	ø2	ø4	ø6	ø8
MOVEMENT	SB	WB	NB	EB
MIN. GREEN	20	10	20	10
VEHICLE EXTENSION	–	2.0	–	2.0
MAX 1	50	30	50	30
MAX 2	–	–	–	–
YELLOW	3.5	3.5	3.5	3.5
ALL RED	1.0	1.0	1.0	1.0
WALK	6	6	6	6
PED. CLEAR	10	11	10	11
RECALL	MIN	–	MIN	–
CALL TO NON-ACTUATED	1	–	1	–

COORDINATION TIMING (SECONDS)

CYCLE/OFFSET	PHASE ø2	ø4	ø6	ø8	DESCRIPTION
60/35	35	25	35	25	12AM-6AM, 7 DAYS
75/54	50	20	50	20	6AM-10:30AM, M-F
75/55	45	30	45	30	10:30AM-7PM, M-F
70/47	45	25	45	25	7PM-12AM M-F 6AM-12AM, SA & SU

NOTES:
1. OFFSETS REFERENCED TO BEGINNING OF ø2 & ø6
2. ø2, ø4, ø6, & ø8 TO BE PROGRAMMED FOR DUAL ENTRY.

REMOVAL OF TRAFFIC SIGNAL INSTALLATION

DESCRIPTION OF ITEM TO BE REMOVED BY CONTRACTOR	REMOVE AND SALVAGE	DISPOSE
VEHICULAR SIGNAL HEADS (8)-3 SECTION, 1-WAY	X	
POLE MOUNTED CONTROL CABINET AND CONTROLLER	X	
(4) STRAIN POLES	X	
(1) MAST ARM SIGN SUPPORT	X	
CABLE & WIRE		X

TRAFFIC CONTROL QUANTITIES

ITEM	EXT.	QTY.	UNITS	DESCRIPTION
625	25400	72	LF	CONDUIT, 2", 713.04
625	25500	197	LF	CONDUIT, 3", 713.04
625	29501	39	LF	TRENCH IN PAVED AREA, TYPE A, AS PER PLAN
625	29601	176	LF	TRENCH IN PAVED AREA, TYPE B
625	30700	4	EACH	PULL BOX, 713.06, 18"
625	32000	4	EACH	GROUND ROD
630	79100	3	EACH	SIGN HANGER ASSEMBLY, MAST ARM
630	79500	8	EACH	SIGN SUPPORT ASSEMBLY, POLE MOUNTED
630	87100	3	EACH	REMOVAL OF OVERHEAD MOUNTED SIGN AND REERECTION
630	87400	1	EACH	REMOVAL OF OVERHEAD MOUNTED SIGN AND DISPOSAL
630	87520	4	EACH	REMOVAL OF POLE MOUNTED SIGN AND REERECTION
632	00300	8	EACH	VEHICULAR SIGNAL HEAD, 3 SECTION, 12" LENS, 1-WAY
632	20102	8	EACH	PEDESTRIAN SIGNAL HEAD, TYPE A2, AS PER PLAN
632	25000	8	EACH	COVERING OF VEHICULAR SIGNAL HEAD
632	26000	4	EACH	PEDESTRIAN PUSH BUTTON
632	26500	3	EACH	DETECTOR LOOP
632	27105	2	EACH	LOOP DETECTOR UNIT, 2 CHANNEL, DELAY AND EXTENSION TYPE, AS PER PLAN
632	40500	579	LF	SIGNAL CABLE, 5 CONDUCTOR, NO. 14 AWG
632	40700	446	LF	SIGNAL CABLE, 7 CONDUCTOR, NO. 14 AWG
632	62803	325	LF	INTERCONNECT CABLE, INTEGRAL MESSENGER WIRE TYPE, 6 PAIR, NO. 19 AWG, SOLID, REA (PE-38), AS PER PLAN
632	64010	4	EACH	SIGNAL SUPPORT FOUNDATION
632	65200	360	LF	LOOP DETECTOR LEAD-IN CABLE
632	68200	20	LF	POWER CABLE, 2 CONDUCTOR, NO. 6 AWG
632	70001	1	EACH	POWER SERVICE, AS PER PLAN
632	80201	1	EACH	SIGNAL SUPPORT, TYPE TC-81.20, DESIGN 2, AS PER PLAN
632	80301	1	EACH	SIGNAL SUPPORT, TYPE TC-81.20, DESIGN 3, AS PER PLAN
632	80501	1	EACH	SIGNAL SUPPORT, TYPE TC-81.20, DESIGN 11, AS PER PLAN
632	81201	1	EACH	COMBINATION SIGNAL SUPPORT, TYPE TC-81.20, DESIGN 2, AS PER PLAN
632	90101	1	EACH	REMOVAL OF TRAFFIC SIGNAL INSTALLATION, AS PER PLAN
633	38001	1	EACH	CONTROLLER, ACTUATED, 8 PHASE, SOLID STATE DIGITAL MICROPROCESSOR, AS PER PLAN
633	99000	1	EACH	CONTROLLER, MISC.: PREEMPTION, AS PER PLAN
642	00302	0.034	MILE	CENTER LINE, TYPE 2
642	00402	80	LF	CHANNELIZING LINE, TYPE 2
642	00602	460	LF	CROSSWALK LINE, TYPE 2
644	00500	45	LF	STOP LINE
644	01300	1	EACH	LANE ARROW
644	01400	1	EACH	WORD ON PAVEMENT, 72"
644	30000	24	LF	REMOVAL OF PAVEMENT MARKING
633	99000	1	EACH	ALTERNATE BID: CONTROLLER, MISC.: PREEMPTION, AS PER PLAN

SIGNAL DISPLAY SCHEDULE

PHASE / SIGNAL	ø2 & ø6 R/W	CLEARANCE			ø4 & ø8 R/W	CLEARANCE			FLASH	PREEMPTION CALL SB R/W	CLEARANCE		PREEMPTION CALL WB R/W	CLEARANCE		PREEMPTION CALL NB R/W	CLEARANCE		PREEMPTION CALL EB R/W	CLEARANCE	
H1,H2	G	G	Y	R	R	R	R	R	Y	R	R	R	R	R	R	G	Y	R	R	R	R
H3,H4	G	G	Y	R	R	R	R	R	Y	G	Y	R	R	R	R	R	R	R	R	R	R
H5,H6	R	R	R	R	G	G	Y	R	R	R	R	R	G	Y	R	R	R	R	R	R	R
H7,H8	R	R	R	R	G	G	Y	R	R	R	R	R	R	R	R	R	R	R	G	Y	R
P1,P2, P3,P4	W	FDW	DW	DW	DW	DW	DW	DW	OFF	DW	DW	DW	DW	DW	DW	DW	DW	DW	DW	DW	DW
P5,P6, P7,P8	DW	DW	DW	DW	W	FDW	DW	DW	OFF	DW	DW	DW	DW	DW	DW	DW	DW	DW	DW	DW	DW

POLE ORIENTATION DATA CHART

SUPPORT NO.	POLE DESIGN NO.	MAST ARM DESIGN NO.	STATION & OFFSET	POLE HEIGHT (ft.)	PED SIGNALS	PED BUTTONS	HANDHOLE	CABLE ENTRANCE	POWER SERVICE	LUMINAIRE ARM	MAST ARM A ANGLE (DEG.)	MAST ARM B ANGLE (DEG.)	ℓ (ft)	L1 (ft)	L2 (ft)	L3 (ft)	LUMINAIRE ARM LENGTH (ft)	CONTROLLER
MAST ARM 1	2	2	74+61.9, 45.2' LT.	23	0/270	0	90	–	–	–	90	–	31	13	23	30	–	–
MAST ARM 2	2	2	74+66.0, 30.1' RT.	30	180/270	270	90	270	90	0	0	–	31	13	25	30	10	180
MAST ARM 3	3	3	73+91.5, 44.3' RT.	23	0/270	0	90	–	–	–	90	–	35	22	34	–	–	–
MAST ARM 4	11	11	73+98.3, 42.1' LT.	23	0/270	270	180	–	–	–	0	–	41	23	35	40	–	–

WIRING DIAGRAM

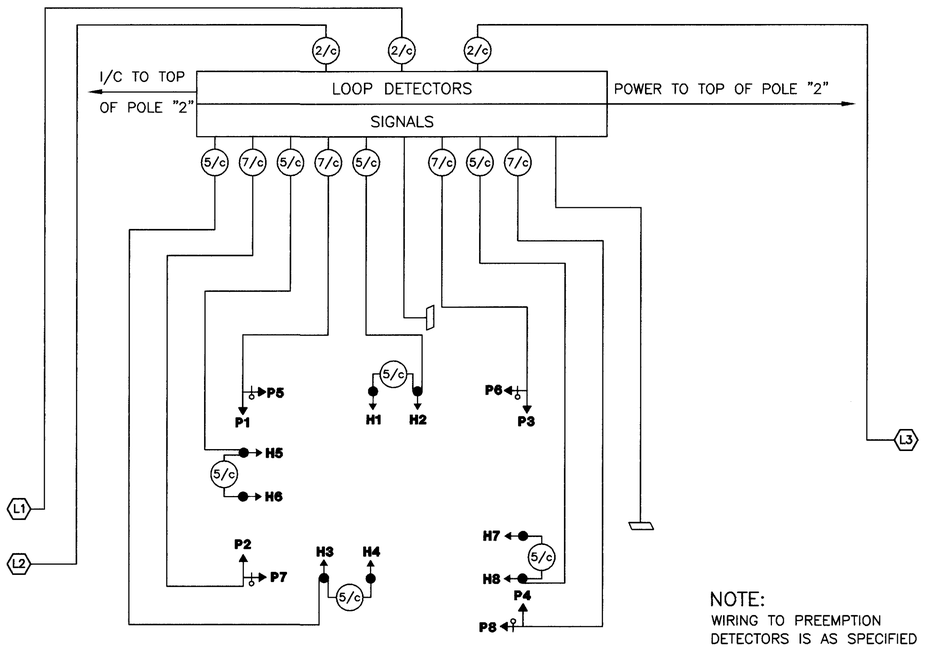

NOTE:
WIRING TO PREEMPTION DETECTORS IS AS SPECIFIED BY MANUFACTURER

CALCULATED: - -
CHECKED: - -

US 68 AND WASHINGTON STREET
TRAFFIC SIGNAL PLAN

CHP-36-14.23
PID NO. 20258

38
50

P:\98240002\DWG\signal\98027B19.DWG.dwg - NOV 18, 1999 - 15:32:30

PHASE DIAGRAM

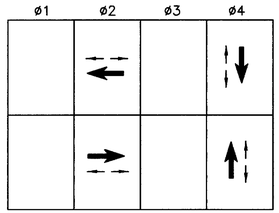

SIGNAL INDICATIONS

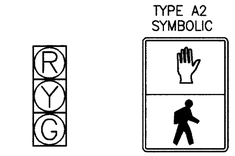

H1,H2,H3,H4,
H5,H6,H7,H8

P1,P2,P3,
P4,P5,P6

ALL INDICATIONS ARE 12"

MOUNT R-73(A) ABOVE
ALL PUSHBUTTONS

REMOVE EXISTING STREET NAME
SIGNS FROM SIGNAL POLE AND
RELOCATE ON MAST ARM SUPPORT "1"

ERECT R-26A-30 SIGNS
ON MAST ARMS "1B" & "2A"

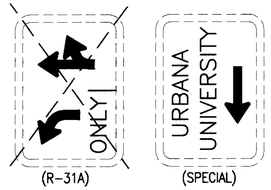

REMOVE GROUND MOUNTED R-31A.

REMOVE GROUND MOUNTED TOURIST ORIENTED
DESTINATION SIGN "URBANA UNIVERSITY" AND
RELOCATE ON THE SAME SUPPORT IN PLACE
OF R-31A.

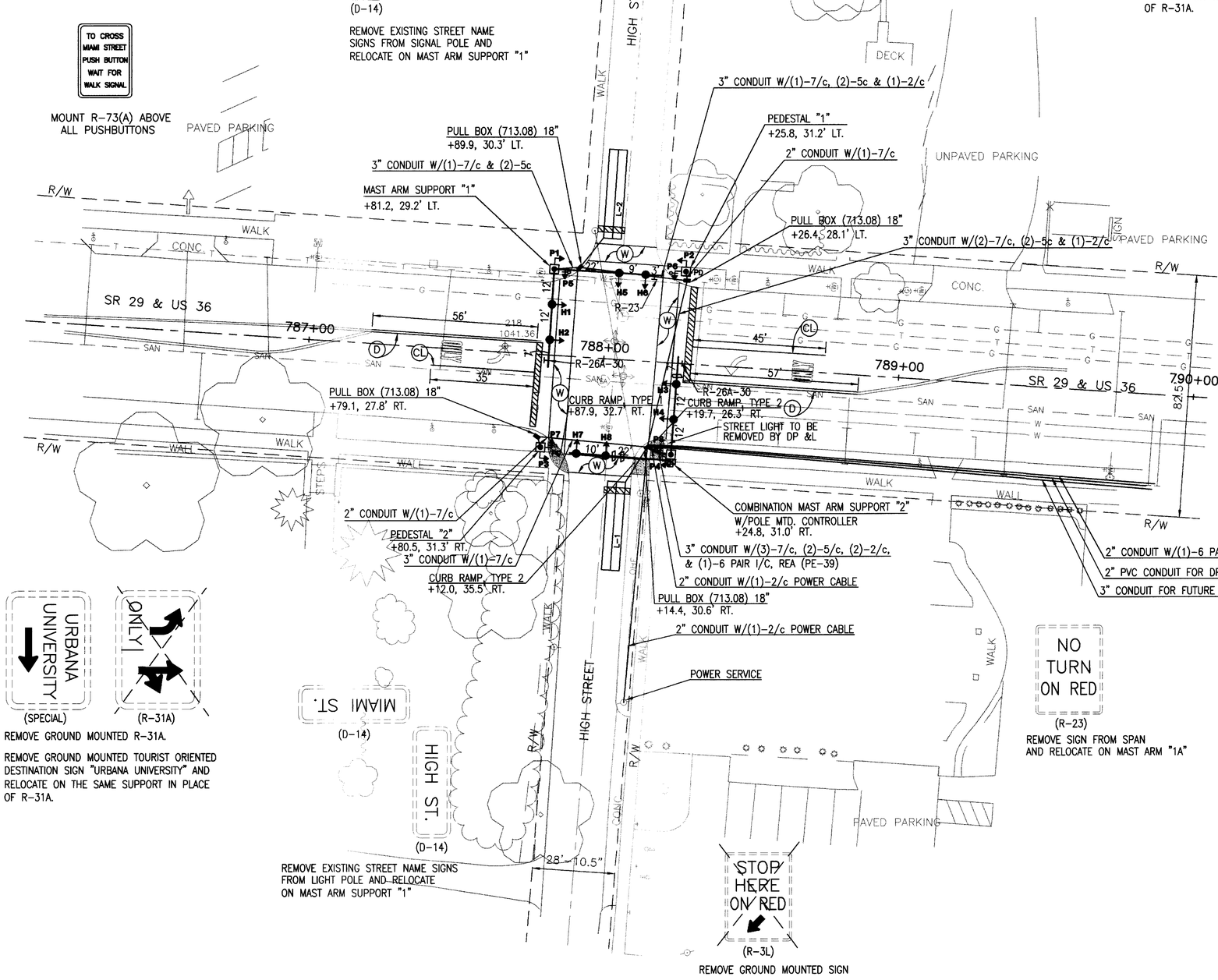

REMOVE GROUND MOUNTED R-31A.

REMOVE GROUND MOUNTED TOURIST ORIENTED
DESTINATION SIGN "URBANA UNIVERSITY" AND
RELOCATE ON THE SAME SUPPORT IN PLACE
OF R-31A.

REMOVE SIGN FROM SPAN
AND RELOCATE ON MAST ARM "1A"

HORIZONTAL
SCALE IN FEET
20 0 20

CALCULATED: --
CHECKED: --

US 36 / SR 29 AND HIGH STREET
TRAFFIC SIGNAL PLAN

CHP-36-14.23
PID NO. 20258

39
50

P:\98240002\DWG\signal\98025G14.DWG.dwg - NOV 18, 1999 - 15:46:51

DETECTOR ASSIGNMENTS

LOOP	SIZE	TURNS	MODE	MEMORY	(E)XTEND/ (D)ELAY (SEC.)	UNIT	CHANNEL	PHASE
L-1	6' x 30'	2-4-2	PRESENCE	NON-LOCK	D-5	1	1	8
L-2	6' x 30'	2-4-2	PRESENCE	NON-LOCK	D-5	1	2	4

NOTES:
ALL LOOPS ARE QUADROPOLE
LOOP L-2 IS PREFORMED

TIMING

PHASE	ø2	ø4	ø6	ø8
MOVEMENT	WB	SB	EB	NB
MIN. GREEN	20	10	20	10
VEHICLE EXTENSION	–	2.0	–	2.0
MAX 1	50	30	50	30
MAX 2	–	–	–	–
YELLOW	3.5	3.5	3.5	3.5
ALL RED	1.0	1.0	1.0	1.0
WALK	6	6	6	6
PED. CLEAR	8	12	8	12
RECALL	MIN	–	MIN	–
CALL TO NON-ACTUATED	1	–	1	–

REMOVAL OF TRAFFIC SIGNAL INSTALLATION

DESCRIPTION OF ITEM TO BE REMOVED BY CONTRACTOR	REMOVE AND SALVAGE	REMOVE AND DISPOSE
VEHICULAR SIGNAL HEADS (8)-3 SECTION, 1-WAY	X	
POLE MOUNTED CONTROL CABINET AND CONTROLLER	X	
(1) STRAIN POLE	X	
(1) WOODEN POLE	X	
CABLE & WIRE		X

TRAFFIC CONTROL QUANTITIES

ITEM	EXT.	QTY.	UNITS	DESCRIPTION
608	53000	110	SF	CURB RAMP, TYPE 1
608	54000	70	SF	CURB RAMP, TYPE 2
625	25400	270	LF	CONDUIT, 2", 713.04
625	25402	115	LF	CONDUIT, 2", 713.07
625	25500	260	LF	CONDUIT, 3", 713.04
625	29000	187	LF	TRENCH
625	29501	50	LF	TRENCH IN PAVED AREA, TYPE A, AS PER PLAN
625	29601	123	LF	TRENCH IN PAVED AREA, TYPE B
625	30700	4	EACH	PULL BOX, 713.08, 18"
625	32000	4	EACH	GROUND ROD
630	79100	3	EACH	SIGN HANGER ASSEMBLY, MAST ARM
630	79500	8	EACH	SIGN SUPPORT ASSEMBLY, POLE MOUNTED
630	80100	15	SF	SIGN, FLAT SHEET
630	84900	3	EACH	REMOVAL OF GROUND MOUNTED SIGN AND DISPOSAL
630	85100	2	EACH	REMOVAL OF GROUND MOUNTED SIGN AND REERECTION
630	87100	1	EACH	REMOVAL OF OVERHEAD MOUNTED SIGN AND REERECTION
630	87520	4	EACH	REMOVAL OF POLE MOUNTED SIGN AND REERECTION
632	00300	8	EACH	VEHICULAR SIGNAL HEAD, 3 SECTION, 12" LENS, 1-WAY
632	20102	8	EACH	PEDESTRIAN SIGNAL HEAD, TYPE A2, AS PER PLAN
632	25000	8	EACH	COVERING OF VEHICULAR SIGNAL HEAD
632	26000	4	EACH	PEDESTRIAN PUSH BUTTON
632	26500	1	EACH	DETECTOR LOOP
632	26501	1	EACH	DETECTOR LOOP, AS PER PLAN
632	27105	1	EACH	LOOP DETECTOR UNIT, 2 CHANNEL, DELAY AND EXTENSION TYPE, AS PER PLAN
632	40500	545	LF	SIGNAL CABLE, 5 CONDUCTOR, NO. 14 AWG
632	40700	382	LF	SIGNAL CABLE, 7 CONDUCTOR, NO. 14 AWG
632	53202	175	LF	INTERCONNECT CABLE, 6 PAIR, NO. 19 AWG, SOLID, REA (PE-39)
632	64010	2	EACH	SIGNAL SUPPORT FOUNDATION
632	64020	2	EACH	PEDESTAL FOUNDATION
632	65200	165	LF	LOOP DETECTOR LEAD-IN CABLE
632	68200	95	LF	POWER CABLE, 2 CONDUCTOR, NO. 6 AWG
632	70001	1	EACH	POWER SERVICE, AS PER PLAN
632	75051	1	EACH	SIGNAL SUPPORT, TYPE TC-81.20 DESIGN 4 POLE, WITH MAST ARMS TC-81.20 DESIGN 3 AND DESIGN 3, AS PER PLAN
632	77051	1	EACH	COMBINATION SIGNAL SUPPORT, TYPE TC-81.20 DESIGN 4 POLE, WITH MAST ARMS TC-81.20 DESIGN 3 AND DESIGN 3, AS PER PLAN
632	89611	2	EACH	PEDESTAL, 9', AS PER PLAN
632	90101	1	EACH	REMOVAL OF TRAFFIC SIGNAL INSTALLATION, AS PER PLAN
633	38001	1	EACH	CONTROLLER, ACTUATED, 8 PHASE, SOLID STATE DIGITAL MICROPROCESSOR, AS PER PLAN
633	99000	1	EACH	CONTROLLER, MISC.: PREEMPTION, AS PER PLAN
642	00302	0.038	MILE	CENTER LINE, TYPE 2
642	00402	80	LF	CHANNELIZING LINE, TYPE 2
644	00500	75	LF	STOP LINE
644	00600	285	LF	CROSSWALK LINE
644	30000	282	LF	REMOVAL OF PAVEMENT MARKING
633	99000	1	EACH	ALTERNATE BID: CONTROLLER, MISC.: PREEMPTION, AS PER PLAN

COORDINATION TIMING (SECONDS)

CYCLE/OFFSET	PHASE ø2	ø4	ø6	ø8	DESCRIPTION
60/59	35	25	35	25	12AM-6AM, 7 DAYS
75/72	50	25	50	25	6AM-10:30AM, M-F
75/1	45	30	45	30	10:30AM-7PM, M-F
70/66	45	25	45	25	7PM-12AM M-F 6AM-12AM, SA & SU

NOTES:
1. OFFSETS REFERENCED TO BEGINNING OF ø2 & ø6
2. ø2, ø4, ø6, & ø8 TO BE PROGRAMMED FOR DUAL ENTRY.

SIGNAL DISPLAY SCHEDULE

PHASE / SIGNAL	ø2 & ø6 R/W	ø2 & ø6 CLEARANCE			ø4 & ø8 R/W	ø4 & ø8 CLEARANCE			FLASH	PREEMPTION CALL WB R/W	PREEMPTION CALL WB CLEARANCE		PREEMPTION CALL SB R/W	PREEMPTION CALL SB CLEARANCE		PREEMPTION CALL EB R/W	PREEMPTION CALL EB CLEARANCE		PREEMPTION CALL NB R/W	PREEMPTION CALL NB CLEARANCE	
H1,H2	G	G	Y	R	R	R	R	R	Y	G	Y	R	R	R	R	R	R	R	R	R	R
H3,H4	G	G	Y	R	R	R	R	R	Y	R	R	R	R	R	R	G	Y	R	R	R	R
H5,H6	R	R	R	R	G	G	Y	R	R	R	R	R	R	R	R	R	R	R	G	Y	R
H7,H8	R	R	R	R	G	G	Y	R	R	R	R	R	G	Y	R	R	R	R	R	R	R
P1,P2, P3,P4	W	FDW	DW	DW	DW	DW	DW	DW	OFF	DW	DW	DW	DW	DW	DW	DW	DW	DW	DW	DW	DW
P5,P6, P7,P8	DW	DW	DW	DW	W	FDW	DW	DW	OFF	DW	DW	DW	DW	DW	DW	DW	DW	DW	DW	DW	DW

POLE ORIENTATION DATA CHART

SUPPORT NO.	POLE DESIGN NO.	MAST ARM DESIGN NO.	STATION & OFFSET	POLE HEIGHT (ft.)	PED SIGNALS	PED BUTTONS	HANDHOLE	CABLE ENTRANCE	POWER SERVICE	LUMINAIRE ARM	MAST ARM A ANGLE (DEG.)	MAST ARM B ANGLE (DEG.)	L (ft)	L1 (ft)	L2 (ft)	L3 (ft)	LUMINAIRE ARM LENGTH (ft)	CONTROLLER
MAST ARM 1	4	3	787+81.2, 29.2' LT.	23	0/270	0	270	–	–	–	270	–	35	22	31	34	–	–
		3	–	–	–	–	–	–	–	–	–	90	32	12	24	31	–	–
MAST ARM 2	4	3	788+24.8, 31.0' RT.	30	0/270	0	180	–	–	0	270	–	33	22	32	–	8	270
		3	–	–	–	–	–	–	–	–	–	90	32	12	24	31	–	–
PEDESTAL 1	–	–	788+25.8, 31.2' LT.	9	90/180	90	180	–	–	–	–	–	–	–	–	–	–	–
PEDESTAL 2	–	–	787+80.5, 31.3' RT.	9	90/180	90	180	–	–	–	–	–	–	–	–	–	–	–

WIRING DIAGRAM

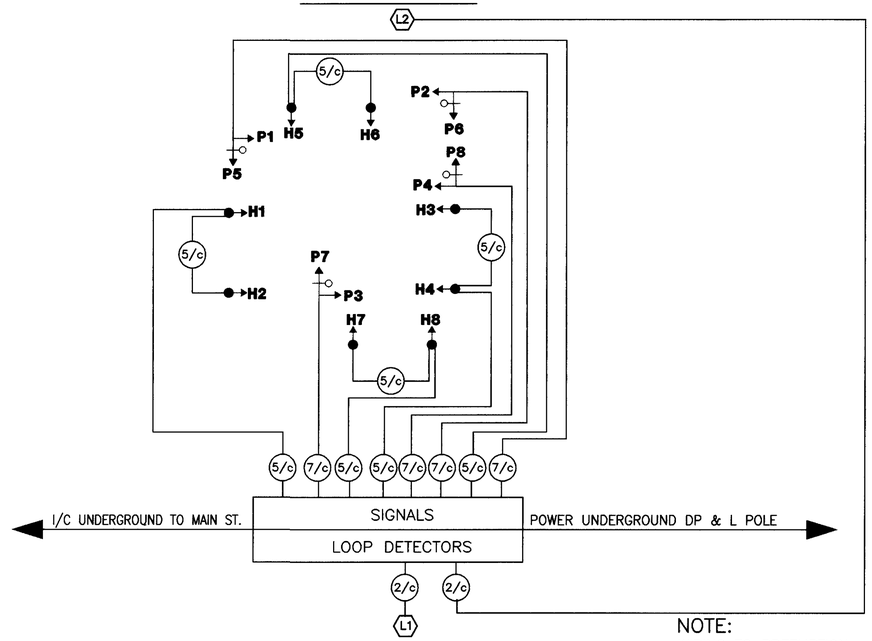

NOTE:
WIRING TO PREEMPTION DETECTORS IS AS SPECIFIED BY MANUFACTURER

CALCULATED: -- --
CHECKED: -- --

US 36 / SR 29 AND HIGH STREET
TRAFFIC SIGNAL PLAN

CHP-36-14.23
PID NO. 20258

40
50

P:\98240002\DWG\signal\9802TB14.DWG - NOV 18, 1999 - 15:47:47

PHASE DIAGRAM

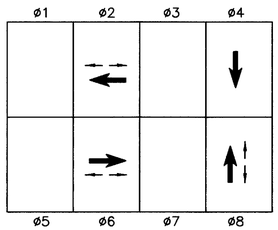

SIGNAL INDICATIONS

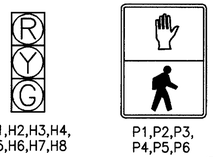

H1,H2,H3,H4,
H5,H6,H7,H8

P1,P2,P3,
P4,P5,P6

ALL INDICATIONS ARE 12"

(R-73A)

MOUNT ABOVE
ALL PUSHBUTTONS

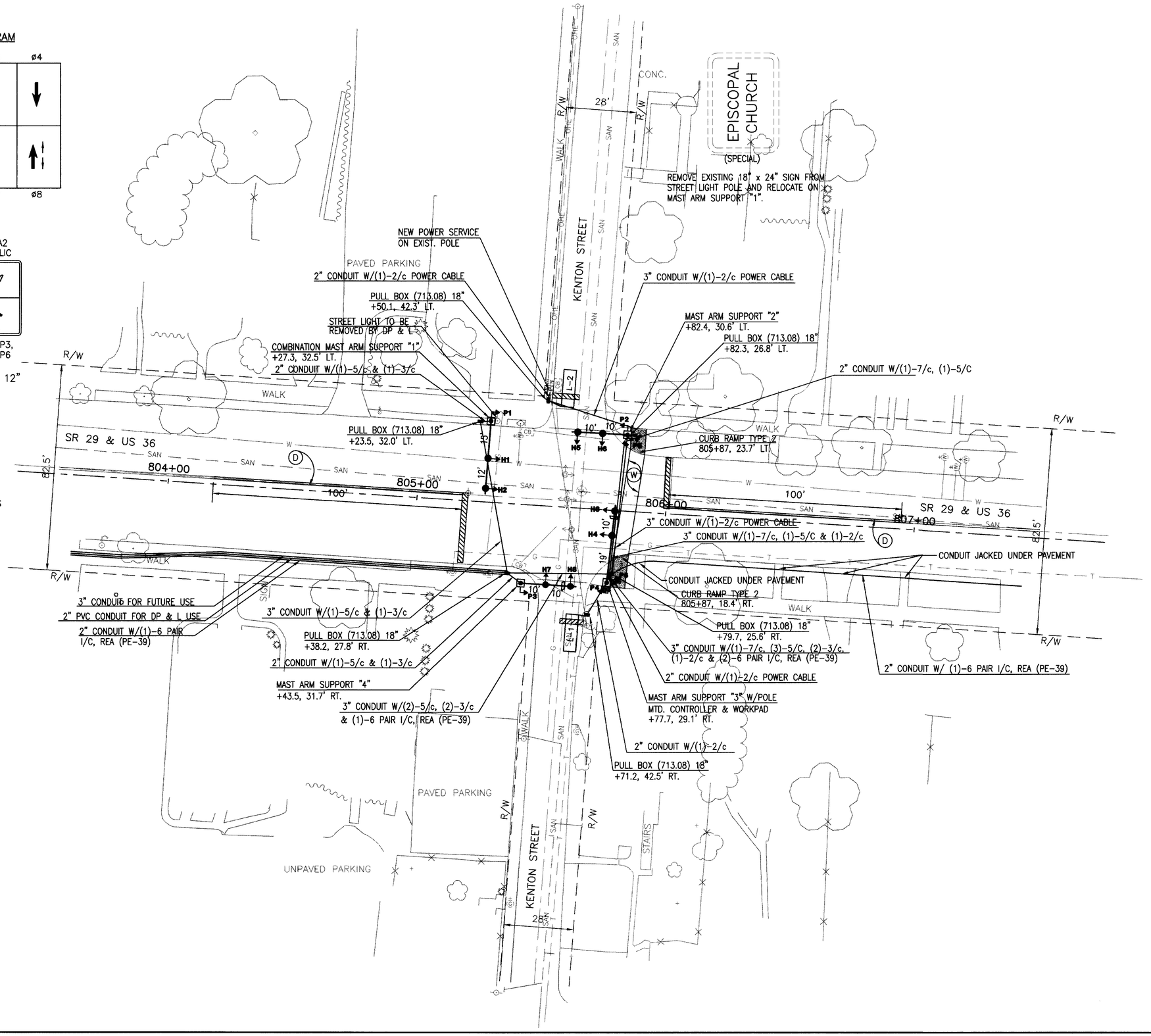

P:\98240002\DWG\signal\98025G15.DWG.dwg — NOV 18, 1999 — 20:03:59

HORIZONTAL SCALE IN FEET
20 0 20

CALCULATED: --
CHECKED: --

US 36 / SR 29 & KENTON STREET
TRAFFIC SIGNAL PLAN

CHP-36-14.23
PID NO. 20258

41
50

DETECTOR ASSIGNMENTS

LOOP	SIZE	TURNS	MODE	MEMORY	(E)XTEND/ (D)ELAY (SEC.)	UNIT	CHANNEL	PHASE
L-1	5' x 15'	3	PRESENCE	NON-LOCK	D-5	1	1	8
L-2	5' x 15'	3	PRESENCE	NON-LOCK	D-5	1	2	4

REMOVAL OF TRAFFIC SIGNAL INSTALLATION

DESCRIPTION OF ITEM TO BE REMOVED BY CONTRACTOR	REMOVE AND SALVAGE	REMOVE AND DISPOSE
VEHICULAR SIGNAL HEADS (8)-3 SECTION, 1-WAY	X	
POLE MOUNTED CONTROL CABINET AND CONTROLLER	X	
(1) WOODEN POLE	X	
CABLE & WIRE		X

TRAFFIC CONTROL QUANTITIES

ITEM	EXT.	QTY.	UNITS	DESCRIPTION
608	10000	60	SF	4" CONCRETE WALK
608	51000	2	EACH	CURB RAMP, TYPE 2
625	25400	145	LF	CONDUIT, 2", 713.04
625	25402	232	LF	CONDUIT, 2", 713.07
625	25500	384	LF	CONDUIT, 3", 713.04
625	25900	24	LF	CONDUIT, JACKED OR DRILLED, 2"
625	29000	203	LF	TRENCH
625	29501	68	LF	TRENCH IN PAVED AREA, TYPE A, AS PER PLAN
625	29601	158	LF	TRENCH IN PAVED AREA, TYPE B
625	30700	6	EACH	PULL BOX, 713.08, 18"
625	32000	4	EACH	GROUND ROD
630	79500	3	EACH	SIGN SUPPORT ASSEMBLY, POLE MOUNTED
630	87520	1	EACH	REMOVAL OF POLE MOUNTED SIGN AND REERECTION
632	00300	8	EACH	VEHICULAR SIGNAL HEAD, 3 SECTION, 12" LENS, 1-WAY
632	20102	6	EACH	PEDESTRIAN SIGNAL HEAD, TYPE A2, AS PER PLAN
632	25000	8	EACH	COVERING OF VEHICULAR SIGNAL HEAD
632	26000	2	EACH	PEDESTRIAN PUSH BUTTON
632	26500	2	EACH	DETECTOR LOOP
632	40300	233	LF	SIGNAL CABLE, 3 CONDUCTOR, NO. 14 AWG
632	40500	455	LF	SIGNAL CABLE, 5 CONDUCTOR, NO. 14 AWG
632	40700	93	LF	SIGNAL CABLE, 7 CONDUCTOR, NO. 14 AWG
632	53202	324	LF	INTERCONNECT CABLE, 6 PAIR, NO. 19 AWG, SOLID, REA (PE-39)
632	62803	155	LF	INTERCONNECT CABLE, INTEGRAL MESSENGER WIRE TYPE, 6 PAIR, NO. 19 AWG, SOLID, REA (PE-38), AS PER PLAN
632	64010	4	EACH	SIGNAL SUPPORT FOUNDATION
632	65200	145	LF	LOOP DETECTOR LEAD-IN CABLE
632	68200	122	LF	POWER CABLE, 2 CONDUCTOR, NO. 6 AWG
632	70001	1	EACH	POWER SERVICE, AS PER PLAN
632	80101	2	EACH	SIGNAL SUPPORT, TYPE TC-81.20, DESIGN 1, AS PER PLAN
632	80201	1	EACH	SIGNAL SUPPORT, TYPE TC-81.20, DESIGN 2, AS PER PLAN
632	81201	1	EACH	COMBINATION SIGNAL SUPPORT, TYPE TC-81.20, DESIGN 2, AS PER PLAN
632	90101	1	EACH	REMOVAL OF TRAFFIC SIGNAL INSTALLATION, AS PER PLAN
633	38001	1	EACH	CONTROLLER, ACTUATED, 8 PHASE, SOLID STATE DIGITAL MICROPROCESSOR, AS PER PLAN
633	99000	1	EACH	CONTROLLER, MISC.: PREEMPTION, AS PER PLAN
642	00302	0.038	MILE	CENTER LINE, TYPE 2
644	00500	70	LF	STOP LINE
644	00600	107	LF	CROSSWALK LINE
644	30000	45	LF	REMOVAL OF PAVEMENT MARKING
633	99000	1	EACH	ALTERNATE BID: CONTROLLER, MISC.: PREEMPTION, AS PER PLAN

TIMING

PHASE	ø2	ø4	ø6	ø8
MOVEMENT	WB	SB	EB	NB
MIN. GREEN	20	10	20	10
VEHICLE EXTENSION	–	2.0	–	2.0
MAX 1	53	25	53	25
MAX 2	–	–	–	–
YELLOW	3.5	3.5	3.5	3.5
ALL RED	1.0	1.0	1.0	1.0
WALK	6	6	6	6
PED. CLEAR	8	11	8	11
RECALL	MIN	–	MIN	–
CALL TO NON-ACTUATED	1	–	1	–

COORDINATION TIMING (SECONDS)

CYCLE/OFFSET	PHASE ø2	ø4	ø6	ø8	DESCRIPTION
60/56	35	25	35	25	12AM-6AM, 7 DAYS
75/67	53	22	53	22	6AM-10:30AM, M-F
75/69	53	22	53	22	10:30AM-7PM, M-F
70/57	45	25	45	25	7PM-12AM M-F 6AM-12AM, SA & SU

NOTES:
1. OFFSETS REFERENCED TO BEGINNING OF ø2 & ø6
2. ø2, ø4, ø6, & ø8 TO BE PROGRAMMED FOR DUAL ENTRY.

SIGNAL DISPLAY SCHEDULE

PHASE / SIGNAL	ø2 & ø6 R/W	ø2 & ø6 CLEARANCE			ø4 & ø8 R/W	ø4 & ø8 CLEARANCE			FLASH	PREEMPTION CALL WB R/W	PREEMPTION CALL WB CLEARANCE		PREEMPTION CALL SB R/W	PREEMPTION CALL SB CLEARANCE		PREEMPTION CALL EB R/W	PREEMPTION CALL EB CLEARANCE		PREEMPTION CALL NB R/W	PREEMPTION CALL NB CLEARANCE	
H1,H2	G	G	Y	R	R	R	R	R	Y	G	Y	R	R	R	R	R	R	R	R	R	R
H3,H4	G	G	Y	R	R	R	R	R	Y	R	R	R	R	R	R	G	Y	R	R	R	R
H5,H6	R	R	R	R	G	G	Y	R	R	R	R	R	R	R	R	R	R	R	G	Y	R
H7,H8	R	R	R	R	G	G	Y	R	R	R	R	R	G	Y	R	R	R	R	R	R	R
P1,P2, P3,P4	W	FDW	DW	DW	DW	DW	DW	DW	OFF	DW	DW	DW	DW	DW	DW	DW	DW	DW	DW	DW	DW
P5,P6	DW	DW	DW	DW	W	FDW	DW	DW	OFF	DW	DW	DW	DW	DW	DW	DW	DW	DW	DW	DW	DW

POLE ORIENTATION DATA CHART

SUPPORT NO.	POLE DESIGN NO.	MAST ARM DESIGN NO.	STATION & OFFSET	POLE HEIGHT (ft.)	PED SIGNALS	PED BUTTONS	HANDHOLE	CABLE ENTRANCE	POWER SERVICE	LUMINAIRE ARM	MAST ARM A ANGLE (DEG.)	MAST ARM B ANGLE (DEG.)	L (ft)	L1 (ft)	L2 (ft)	L3 (ft)	LUMINAIRE ARM LENGTH (ft)	CONTROLLER
MAST ARM 1	2	2	805+27.3, 32.5' LT.	30	180	–	180	–	–	0	0	–	28	15	27	–	8	–
MAST ARM 2	1	1	805+82.4, 30.6' LT.	23	90/180	180	180	–	–	–	90	–	21	10	20	–	–	–
MAST ARM 3	2	2	805+77.7, 29.1' RT.	23	90/180	90	180	90	–	–	0	–	30	19	29	–	–	180
MAST ARM 4	1	1	805+43.5, 31.7' RT.	23	90	–	180	–	–	–	90	–	21	10	20	–	–	–

WIRING DIAGRAM

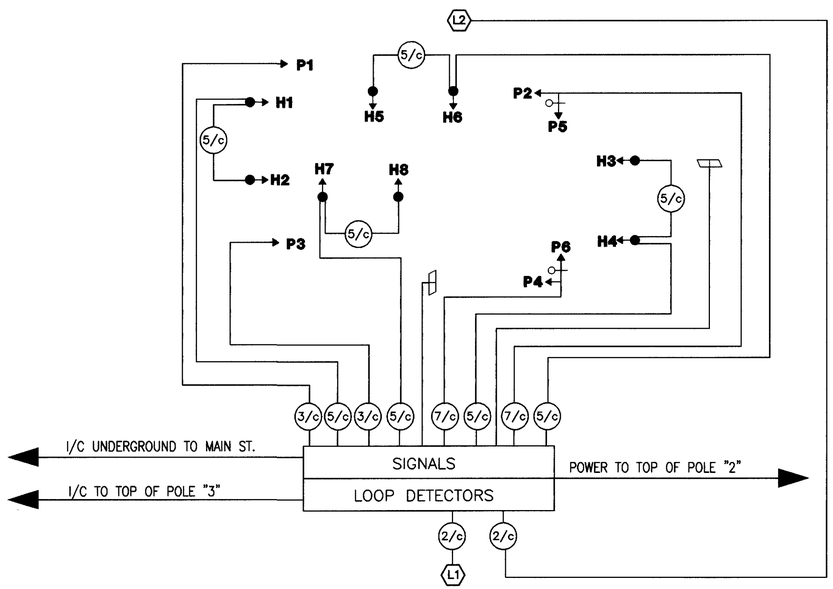

NOTE:
WIRING TO PREEMPTION DETECTORS IS AS SPECIFIED BY MANUFACTURER

CALCULATED: - -
CHECKED: - -

US 36 / SR 29 AND KENTON STREET
TRAFFIC SIGNAL PLAN

CHP-36-14.23
PID NO. 20258

P:\98240002\DWG\signal\9802TB15.DWG.dwg - NOV 18, 1999 - 20:05:36

PHASE DIAGRAM

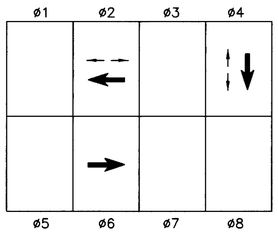

SIGNAL INDICATIONS

H1,H2,H3,
H4,H5,H6

TYPE A2
SYMBOLIC

P1,P2,P3,P4

ALL INDICATIONS ARE 12"

(R-73A)

MOUNT ABOVE
ALL PUSHBUTTONS

(R-27A)

REMOVE SPAN MTD. R-27A AND
RELOCATE ON MAST ARM "1".

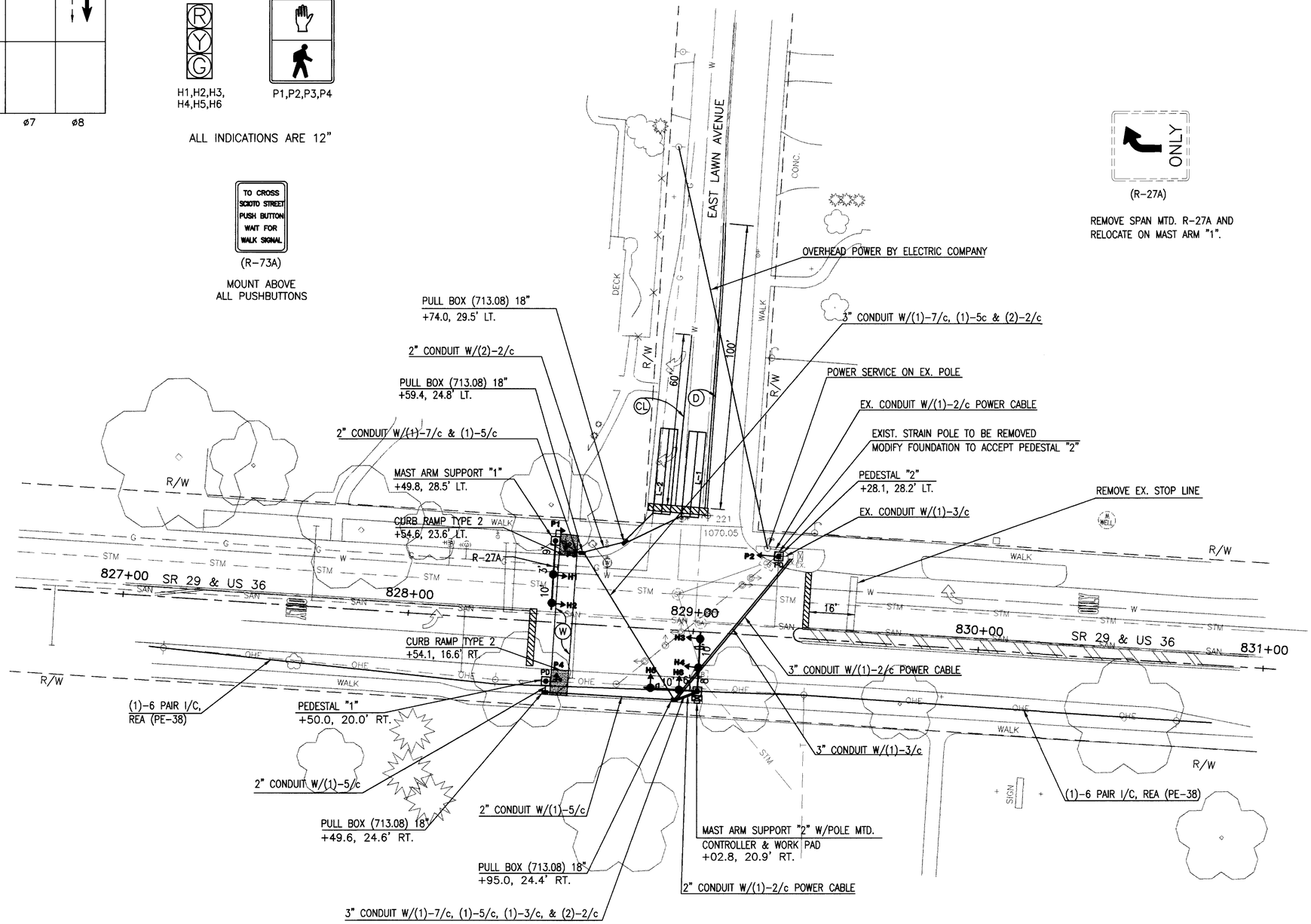

HORIZONTAL
SCALE IN FEET
20 0 20

CALCULATED:
CHECKED:

US 36 / SR 29 AND EAST LAWN AVENUE
TRAFFIC SIGNAL PLAN

CHP-36-14.23
PID NO. 20258

43
50

P:\98240002\DWG\signal\98025G02.DWG.dwg — NOV 18, 1999 — 19:59:54

DETECTOR ASSIGNMENTS

LOOP	SIZE	TURNS	MODE	MEMORY	(E)XTEND/ (D)ELAY (SEC.)	UNIT	CHANNEL	PHASE
L–1	6' x 30'	2–4–2	PRESENCE	NON–LOCK	D–5	1	1	4
L–2	6' x 30'	2–4–2	PRESENCE	NON–LOCK	D–5	1	2	4

NOTES:
ALL LOOPS ARE QUADROPOLE

TIMING

PHASE	ø2	ø4	ø6
MOVEMENT	WB	SB	EB
MIN. GREEN	20	10	20
VEHICLE EXTENSION	–	2.0	–
MAX 1	52	27	52
MAX 2	–	–	–
YELLOW	3.5	3.5	3.5
ALL RED	1.0	1.0	1.0
WALK	6	6	6
PED. CLEAR	8	11	8
RECALL	MIN	–	MIN
CALL TO NON–ACTUATED	1	–	1

COORDINATION TIMING (SECONDS)

CYCLE/OFFSET	PHASE ø2	PHASE ø4	PHASE ø6	DESCRIPTION
70/10	45	25	45	12AM–6AM, 7 DAYS
75/30	52	23	52	6AM–10:30AM, M–F
75/24	48	27	48	10:30AM–7PM, M–F
70/16	45	25	45	7PM–12AM M–F 6AM–12AM, SA & SU

NOTES:
1. OFFSETS REFERENCED TO BEGINNING OF ø2 & ø6
2. ø2 & ø6 TO BE PROGRAMMED FOR DUAL ENTRY.

REMOVAL OF TRAFFIC SIGNAL INSTALLATION

DESCRIPTION OF ITEM TO BE REMOVED BY CONTRACTOR	REMOVE AND SALVAGE	REMOVE AND DISPOSE
VEHICULAR SIGNAL HEADS (6)–3 SECTION, 1–WAY	X	
PEDESTAL MOUNTED CONTROL CABINET AND CONTROLLER	X	
(2) STRAIN POLES	X	
CABLE & WIRE		X

TRAFFIC CONTROL QUANTITIES

ITEM	EXT.	QTY.	UNITS	DESCRIPTION
608	51000	2	EACH	CURB RAMP, TYPE 2
625	25400	81	LF	CONDUIT, 2", 713.04
625	25500	197	LF	CONDUIT, 3", 713.04
625	29000	97	LF	TRENCH
625	29501	10	LF	TRENCH IN PAVED AREA, TYPE A, AS PER PLAN
625	29601	100	LF	TRENCH IN PAVED AREA, TYPE B
625	30700	4	EACH	PULL BOX, 713.08, 18"
625	32000	4	EACH	GROUND ROD
630	79100	1	EACH	SIGN HANGER ASSEMBLY, MAST ARM
630	79500	2	EACH	SIGN SUPPORT ASSEMBLY, POLE MOUNTED
630	87100	1	EACH	REMOVAL OF OVERHEAD MOUNTED SIGN AND REERECTION
632	00300	6	EACH	VEHICULAR SIGNAL HEAD, 3 SECTION, 12" LENS, 1–WAY
632	20102	4	EACH	PEDESTRIAN SIGNAL HEAD, TYPE A2, AS PER PLAN
632	25000	6	EACH	COVERING OF VEHICULAR SIGNAL HEAD
632	26000	2	EACH	PEDESTRIAN PUSH BUTTON
632	26500	2	EACH	DETECTOR LOOP
632	27105	1	EACH	LOOP DETECTOR UNIT, 2 CHANNEL, DELAY AND EXTENSION TYPE, AS PER PLAN
632	40300	114	LF	SIGNAL CABLE, 3 CONDUCTOR, NO. 14 AWG
632	40500	391	LF	SIGNAL CABLE, 5 CONDUCTOR, NO. 14 AWG
632	40700	118	LF	SIGNAL CABLE, 7 CONDUCTOR, NO. 14 AWG
632	62803	370	LF	INTERCONNECT CABLE, INTEGRAL MESSENGER WIRE TYPE, 6 PAIR, NO. 19 AWG, SOLID, REA (PE–38), AS PER PLAN
632	64010	2	EACH	SIGNAL SUPPORT FOUNDATION
632	64020	2	EACH	PEDESTAL FOUNDATION
632	65200	212	LF	LOOP DETECTOR LEAD–IN CABLE
632	68200	97	LF	POWER CABLE, 2 CONDUCTOR, NO. 6 AWG
632	70001	1	EACH	POWER SERVICE, AS PER PLAN
632	75001	1	EACH	SIGNAL SUPPORT, TYPE TC–81.20 DESIGN 3 POLE, WITH MAST ARMS TC–81.20 DESIGN 1 AND DESIGN 1 , AS PER PLAN
632	80101	1	EACH	SIGNAL SUPPORT, TYPE TC–81.20 DESIGN 1, AS PER PLAN
632	89611	2	EACH	PEDESTAL, 9', AS PER PLAN
632	90101	1	EACH	REMOVAL OF TRAFFIC SIGNAL INSTALLATION, AS PER PLAN
633	38001	1	EACH	CONTROLLER, ACTUATED, 8 PHASE, SOLID STATE DIGITAL MICROPROCESSOR, AS PER PLAN
633	70500	8.6	SF	CONTROLLER WORK PAD
633	99000	1	EACH	CONTROLLER, MISC.: PREEMPTION, AS PER PLAN
642	00302	0.019	MILE	CENTER LINE, TYPE 2
642	00402	60	LF	CHANNELIZING LINE, TYPE 2
644	00500	60	LF	STOP LINE
644	00600	98	LF	CROSSWALK LINE
644	30000	62	LF	REMOVAL OF PAVEMENT MARKING
633	99000	1	EACH	ALTERNATE BID: CONTROLLER, MISC.: PREEMPTION, AS PER PLAN

SIGNAL DISPLAY SCHEDULE

PHASE / SIGNAL	ø2 + ø6 R/W	ø2 + ø6 CLEARANCE			ø4 R/W	ø4 CLEARANCE			FLASH	PREEMPTION CALL WB R/W	PREEMPTION CALL WB CLEARANCE		PREEMPTION CALL SB R/W	PREEMPTION CALL SB CLEARANCE		PREEMPTION CALL EB R/W	PREEMPTION CALL EB CLEARANCE	
H1,H2	G	G	Y	R	R	R	R	R	Y	G	Y	R	R	R	R	R	R	R
H3,H4	G	G	Y	R	R	R	R	R	Y	R	R	R	R	R	R	G	Y	R
H5,H6	R	R	R	R	G	G	Y	R	R	R	R	R	G	Y	R	R	R	R
P1,P2	W	FDW	DW	DW	DW	DW	DW	DW	OFF	DW	DW	DW	DW	DW	DW	DW	DW	DW
P3,P4	DW	DW	DW	DW	W	FDW	DW	DW	OFF	DW	DW	DW	DW	DW	DW	DW	DW	DW

POLE ORIENTATION DATA CHART

SUPPORT NO.	POLE DESIGN NO.	MAST ARM DESIGN NO.	STATION & OFFSET	POLE HEIGHT (ft.)	PED SIGNALS	PED BUTTONS	HANDHOLE	CABLE ENTRANCE	POWER SERVICE	MAST ARM A ANGLE (DEG.)	MAST ARM B ANGLE (DEG.)	L (ft)	L1 (ft)	L2 (ft)	L3 (ft)		CONTROLLER
MAST ARM 1	1	1	828+49.8, 28.5' LT.	23	180/270	270	180	–	–	0	–	23	9	12	22		–
MAST ARM 2	3	1	829+02.8, 20.9' RT.	23	–	–	90	0	–	0	–	19	8	18	–		180
		1	–	–	–	–	–	–	–	–	270	17	6	16	–		–
PEDESTAL 1	–	–	828+50.0, 21.0' RT.	9	90	90	–	–	–	–	–	–	–	–	–		–
PEDESTAL 2	–	–	829+28.1, 28.2' LT.	9	90	–	–	–	–	–	–	–	–	–	–		–

WIRING DIAGRAM

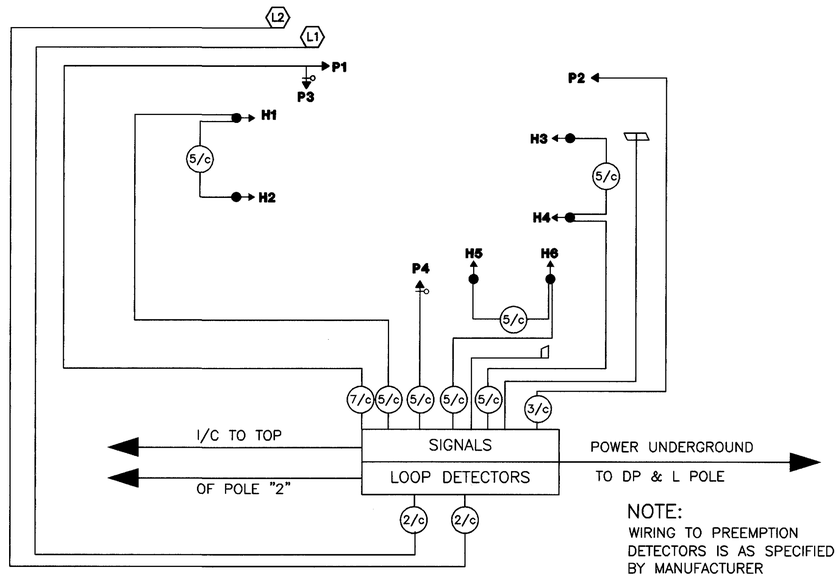

NOTE:
WIRING TO PREEMPTION DETECTORS IS AS SPECIFIED BY MANUFACTURER

CALCULATED: : :
CHECKED: : :

US 36 / SR 29 AND EAST LAWN AVENUE
TRAFFIC SIGNAL PLAN

CHP-36-14.23
PID NO. 20258

P:\98240002\DWG\signal\98027B02.DWG - NOV 18, 1999 - 20:01:03

PHASE DIAGRAM

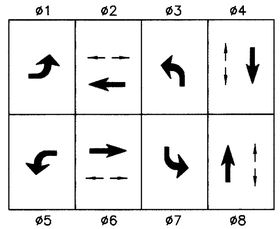

(R-26A)

(R-23)

REMOVE SPAN MTD. SIGNS
& RELOCATE ON MAST ARM "3".

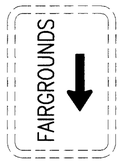

(SPECIAL)

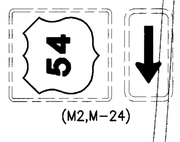

(M2,M-24)

REMOVE STRAIN POLE MTD. SIGNS
& RELOCATE ON SUPPORT "1".

(R-26A)

REMOVE SPAN MTD. SIGN
& RELOCATE ON MAST ARM "3".

3" CONDUIT W/(2)-7/c & (2)-2/c

MAST ARM SUPPORT "1"
+19.4, 44.2' LT.

2" CONDUIT W/(2)-7/c

PULL BOX (713.08) 18"
+21.5, 34.5' LT.

MAST ARM SUPPORT "3"
+99.3, 40.0' LT.

2" CONDUIT W/(2)-7/c

PULL BOX (713.08) 18"
+07.8, 30.7' LT.

REMOVE EX. STOP LINE

3" CONDUIT W/(4)-7/c & (3)-2/c

REMOVE EX. STOP LINE

MAST ARM SUPPORT "2"
+26.5, 42.9' RT.

2" CONDUIT W/(2)-7/c

PULL BOX (713.08) 18"
+31.3, 47.5' RT.

3" CONDUIT W/(2)-7/c & (1)-2/c

(1)-6 PAIR I/C, REA (PE-38)

MAST ARM SUPPORT "4"
+03.4 34.4' RT.

3" CONDUIT W/(6)-7/c & (6)-2/c

PULL BOX (713.08) 18"
+97.5, 36.1' RT.

"3" CONDUIT W/(2)-7/c, (1)-5/c, & (2)-6 PAIR I/C, REA (PE-38)

MASTER CONTROLLER & WORKPAD W/PHONE DROP
+87.0, 55.5' RT.

"2" CONDUIT W/(1)-2/c POWERCABLE

POWER SERVICE

(1)-6 PAIR I/C, REA (PE-38)

SIGNAL INDICATIONS

TYPE A2
SYMBOLIC

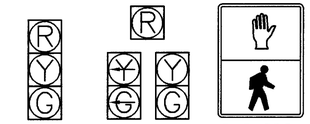

H2,H4,H6,H8 H1,H3,H5,H7 P1,P2,P3,P4 P5,P6,P7,P8

ALL INDICATIONS ARE 12"

(R-73A)

MOUNT ABOVE
ALL PUSHBUTTONS

(R-26A)

REMOVE SPAN MTD. SIGN
& RELOCATE ON MAST ARM "1".

(R-23) (R-26A)

REMOVE SPAN MTD. SIGNS
& RELOCATE ON MAST ARM "2".

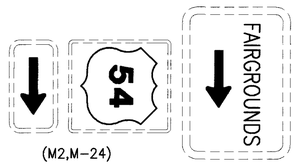

(M2,M-24) (SPECIAL)

REMOVE STRAIN POLE MTD. SIGNS
& RELOCATE ON SUPPORT "4".

SR 29 & US 36
837+00
838+00
840+00
841+00

JEFFERSON AVENUE
(JEFFERSON AVENUE)
SR 54
R/W
PAVED PARKING
UNPAVED PARKING
WALK
CONC.
STM
SAN
OHE
G
W
SIGN
CB
CL
R-23
R-26A

HORIZONTAL
SCALE IN FEET
20 0 20

CALCULATED:
CHECKED:

SR 29 / US 36 AND SR 54 / JEFFERSON AVENUE
TRAFFIC SIGNAL PLAN

CHP-36-14.23
PID NO. 20258

45
50

P:\98240002\DWG\signal\9802SG03.DWG.dwg - NOV 18, 1999 - 19:04:11

DETECTOR ASSIGNMENTS

LOOP	SIZE	TURNS	MODE	MEMORY	(E)XTEND/(D)ELAY (SEC.)	UNIT	CHANNEL	PHASE
L-1	6' x 30'	2-4-2	PRESENCE	NON-LOCK	D-5	1	1	1
L-2	6' x 30'	2-4-2	PRESENCE	NON-LOCK	D-5	1	2	5
L-3	8' x 30'	2-4-2	PRESENCE	NON-LOCK	D-5	2	1	4
L-4	6' x 30'	2-4-2	PRESENCE	NON-LOCK	D-5	2	2	7
L-5	6' x 30'	2-4-2	PRESENCE	NON-LOCK	D-5	3	1	3
L-6	8' x 30'	2-4-2	PRESENCE	NON-LOCK	D-5	3	2	8

NOTES:
ALL LOOPS ARE QUADROPOLE
LOOPS L-5 & L-6 ARE PREFORMED LOOPS

REMOVAL OF TRAFFIC SIGNAL INSTALLATION

DESCRIPTION OF ITEM TO BE REMOVED BY CONTRACTOR	REMOVE AND SALVAGE	REMOVE AND DISPOSE
VEHICULAR SIGNAL HEADS (4)-3 SECTION, 1-WAY (4)-5 SECTION, 1-WAY	X	
GROUND MOUNTED CONTROL CABINET AND CONTROLLER	X	
(4) STRAIN POLES	X	
CABLE & WIRE		X
(4) PEDESTRIAN PUSHBUTTONS & SIGNS	X	

TRAFFIC CONTROL QUANTITIES

ITEM	EXT.	QTY.	UNITS	DESCRIPTION
608	10000	24	SF	4" CONCRETE WALK
625	25400	110	LF	CONDUIT, 2", 713.04
625	25500	227	LF	CONDUIT, 3", 713.04
625	29000	105	LF	TRENCH
625	29501	28	LF	TRENCH IN PAVED AREA, TYPE A, AS PER PLAN
625	29601	194	LF	TRENCH IN PAVED AREA, TYPE B
625	30700	4	EACH	PULL BOX, 713.08, 18"
625	32000	5	EACH	GROUND ROD
630	79100	6	EACH	SIGN HANGER ASSEMBLY, MAST ARM
630	79500	10	EACH	SIGN SUPPORT ASSEMBLY, POLE MOUNTED
630	87100	6	EACH	REMOVAL OF OVERHEAD MOUNTED SIGN AND REERECTION
630	87520	6	EACH	REMOVAL OF POLE MOUNTED SIGN AND REERECTION
632	00300	4	EACH	VEHICULAR SIGNAL HEAD, 3 SECTION, 12" LENS, 1-WAY
632	00500	4	EACH	VEHICULAR SIGNAL HEAD, 5 SECTION, 12" LENS, 1-WAY
632	20102	8	EACH	PEDESTRIAN SIGNAL HEAD, TYPE A2, AS PER PLAN
632	25000	8	EACH	COVERING OF VEHICULAR SIGNAL HEAD
632	26000	4	EACH	PEDESTRIAN PUSH BUTTON
632	26500	4	EACH	DETECTOR LOOP
632	26501	2	EACH	DETECTOR LOOP, AS PER PLAN
632	27105	3	EACH	LOOP DETECTOR UNIT, 2 CHANNEL, DELAY AND EXTENSION TYPE, AS PER PLAN
632	40700	1346	LF	SIGNAL CABLE, 7 CONDUCTOR, NO. 14 AWG
632	62803	362	LF	INTERCONNECT CABLE, INTEGRAL MESSENGER WIRE TYPE, 6 PAIR, NO. 19 AWG, SOLID, REA (PE-38), AS PER PLAN
632	63001	1	EACH	PHONE DROP, AS PER PLAN
632	64010	4	EACH	SIGNAL SUPPORT FOUNDATION
632	65200	583	LF	LOOP DETECTOR LEAD-IN CABLE
632	68200	4	LF	POWER CABLE, 2 CONDUCTOR, NO. 6 AWG
632	70001	1	EACH	POWER SERVICE, AS PER PLAN
632	80301	2	EACH	SIGNAL SUPPORT, TYPE TC-81.20, DESIGN 3, AS PER PLAN
632	80501	2	EACH	SIGNAL SUPPORT, TYPE TC-81.20, DESIGN 11, AS PER PLAN
632	90101	1	EACH	REMOVAL OF TRAFFIC SIGNAL INSTALLATION, AS PER PLAN
633	38001	1	EACH	CONTROLLER, ACTUATED, 8 PHASE, SOLID STATE DIGITAL MICROPROCESSOR, AS PER PLAN
633	39001	1	EACH	CONTROLLER, MASTER, TRAFFIC RESPONSIVE, AS PER PLAN
633	70000	1.83	CY	CONCRETE FOR CABINET FOUNDATION
633	70500	11.2	SF	CONTROLLER WORK PAD
633	99000	1	EACH	CONTROLLER, MISC.: PREEMPTION, AS PER PLAN
642	00302	0.035	MILE	CENTER LINE, TYPE 2
642	00402	246	LF	CHANNELIZING LINE, TYPE 2
644	00500	135	LF	STOP LINE
644	00600	495	LF	CROSSWALK LINE
644	01300	2	EACH	LANE ARROW
644	01400	2	EACH	WORD ON PAVEMENT, 72"
644	30000	60	LF	REMOVAL OF PAVEMENT MARKING
633	99000	1	EACH	ALTERNATE BID: CONTROLLER, MISC.: PREEMPTION, AS PER PLAN

COORDINATION TIMING (SECONDS)

CYCLE/OFFSET	PHASE ø1	ø2	ø3	ø4	ø5	ø6	ø7	ø8	DESCRIPTION
70/20	10	28	9	23	10	28	9	23	12AM-6AM, 7 DAYS
75/10	10	30	10	25	10	30	10	25	6AM-10:30AM, M-F
75/6	10	30	10	25	10	30	10	25	10:30AM-7PM, M-F
70/55	10	28	9	23	10	28	9	23	7PM-12AM M-F 6AM-12AM, SA & SU

NOTES:
1. OFFSETS REFERENCED TO BEGINNING OF ø2 & ø6
2. ø2, ø4, ø6 & ø8 TO BE PROGRAMMED FOR DUAL ENTRY.

TIMING

PHASE	ø1	ø2	ø3	ø4	ø5	ø6	ø7	ø8
MOVEMENT	EBL	WB	SBL	NB	WBL	EB	NBL	SB
MIN. GREEN	4	20	4	10	4	20	4	10
VEHICLE EXTENSION	1.5	–	1.5	2.0	1.5	–	1.5	2.0
MAX 1	10	40	10	35	10	40	10	35
MAX 2	–	–	–	–	–	–	–	–
YELLOW	3.5	3.5	3.5	3.5	3.5	3.5	3.5	3.5
ALL RED	–	1.0	–	1.0	–	1.0	–	1.0
WALK	–	6	–	6	–	6	–	6
PED. CLEAR	–	12	–	12	–	12	–	12
RECALL	–	MIN	–	–	–	MIN	–	–
CALL TO NON-ACTUATED	–	1	–	–	–	1	–	–

POLE ORIENTATION DATA CHART

SUPPORT NO.	POLE DESIGN NO.	MAST ARM DESIGN NO.	STATION & OFFSET	POLE HEIGHT (ft.)	PED SIGNALS	PED BUTTONS	HANDHOLE	CABLE ENTRANCE	POWER SERVICE	MAST ARM A ANGLE (DEG.)	MAST ARM B ANGLE (DEG.)	℄ (ft)	L1 (ft)	L2 (ft)	L3 (ft)	L4 (ft)	CONTROLLER
MAST ARM 1	11	11	838+19.4, 44.2' LT.	23	0/270	270	180	–	–	0	–	42	26	36	41	–	–
MAST ARM 2	3	3	838+26.5' 42.9' RT.	23	180/270	180	180	–	–	90	–	35	14	17	27	34	–
MAST ARM 3	11	11	838+99.3, 40.0' LT.	23	0/270	0	90	–	–	90	–	40	17	20	32	39	–
MAST ARM 4	3	3	839+03.4, 34.4' RT.	23	0/270	270	180	90	–	0	–	36	20	30	35	–	–

WIRING DIAGRAM

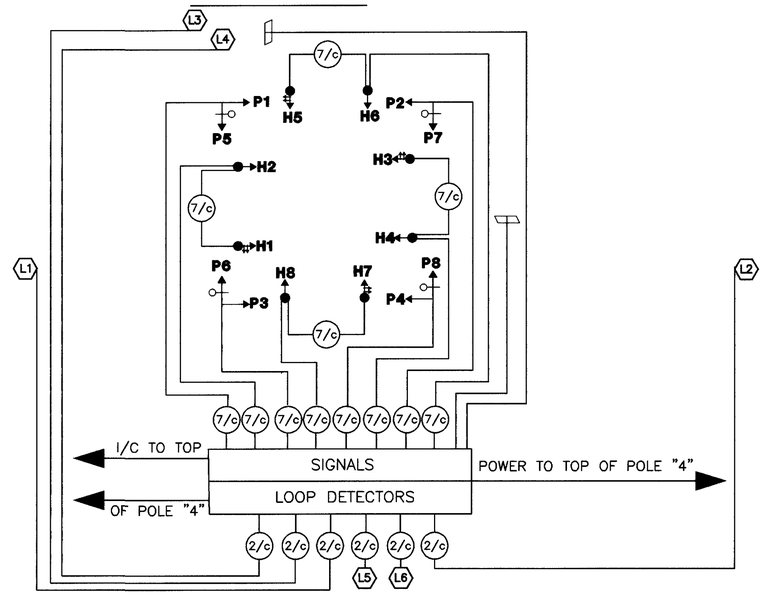

NOTE:
WIRING TO PREEMPTION DETECTORS IS AS SPECIFIED BY MANUFACTURER

CALCULATED: -- CHECKED: --

US 36 / SR 29 AND JEFFERSON AVENUE
TRAFFIC SIGNAL PLAN

CHP-36-14.23
PID NO. 20258

46
50

P:\98240002\DWG\signal\9802TB03.DWG.dwg - NOV 18, 1999 - 19:05:24

SIGNAL MOVEMENT DIAGRAM

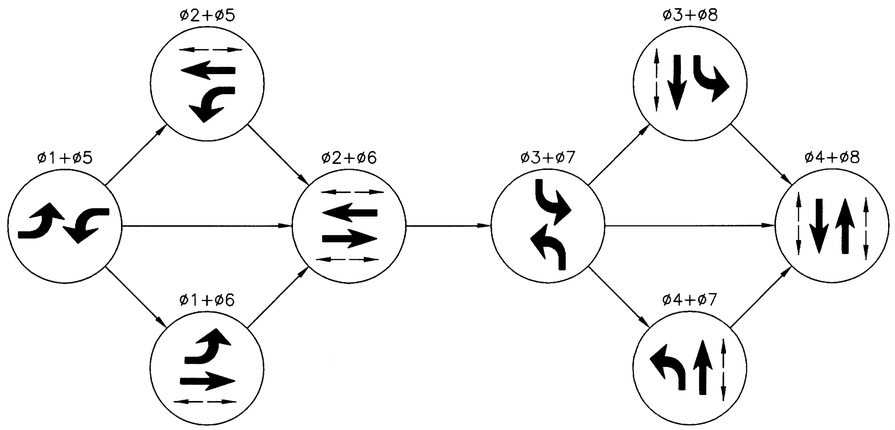

SIGNAL DISPLAY SCHEDULE

PHASE / SIGNAL	ø1 + ø5			ø1 + ø6				ø2 + ø5				ø2 + ø6				ø3 + ø7			ø3 + ø8				ø4 + ø7				ø4 + ø8				FLASH	PREEMPTION CALL WB			PREEMPTION CALL SB			PREEMPTION CALL EB			PREEMPTION CALL NB		
	R/W	CLEARANCE		R/W	CLEARANCE			R/W	CLEARANCE			R/W	CLEARANCE			R/W	CLEARANCE		R/W	CLEARANCE			R/W	CLEARANCE			R/W	CLEARANCE				R/W	CLEARANCE		R/W	CLEARANCE		R/W	CLEARANCE		R/W	CLEARANCE	
H1	GA	YA	R	R	R	R	R	GA	GA	YA	R	G	G	Y	R	R	R	R	R	R	R	R	R	R	R	R	R	R	R	R	Y	R	R	R	R	R	R	GA	YA	R	R	R	R
H2	R	R	R	R	R	R	R	G	G	Y	R	G	G	Y	R	R	R	R	R	R	R	R	R	R	R	R	R	R	R	R	Y	R	R	R	R	R	R	G	Y	R	R	R	R
H3	GA	YA	R	GA	GA	YA	R	R	R	R	R	G	G	Y	R	R	R	R	R	R	R	R	R	R	R	R	R	R	R	R	Y	G	Y	R	R	R	R	R	R	R	R	R	R
H4	R	R	R	G	G	Y	R	R	R	R	R	G	G	Y	R	R	R	R	R	R	R	R	R	R	R	R	R	R	R	R	Y	GA	YA	R	R	R	R	R	R	R	R	R	R
H5	R	R	R	R	R	R	R	R	R	R	R	R	R	R	R	GA	YA	R	GA	GA	YA	R	R	R	R	R	G	G	Y	R	R	R	R	R	R	R	R	R	R	R	R	GA	YA	R
H6	R	R	R	R	R	R	R	R	R	R	R	R	R	R	R	R	R	R	G	G	Y	R	R	R	R	R	G	G	Y	R	R	R	R	R	R	R	R	R	R	R	G	Y	R
H7	R	R	R	R	R	R	R	R	R	R	R	R	R	R	R	GA	YA	R	R	R	R	R	GA	GA	YA	R	G	G	Y	R	R	R	R	R	R	GA	YA	R	R	R	R	R	R
H8	R	R	R	R	R	R	R	R	R	R	R	R	R	R	R	R	R	R	R	R	R	R	G	G	Y	R	G	G	Y	R	R	R	R	R	R	G	Y	R	R	R	R	R	R
P1,P2	DW	DW	DW	DW	DW	DW	DW	W	FDW	DW	DW	W	FDW	DW	DW	DW	DW	DW	DW	DW	DW	DW	DW	DW	DW	DW	DW	DW	DW	DW	OFF	DW	DW	DW	DW	DW	DW	DW	DW	DW	DW	DW	DW
P3,P4	DW	DW	DW	W	FDW	DW	DW	DW	DW	DW	DW	W	FDW	DW	DW	DW	DW	DW	DW	DW	DW	DW	DW	DW	DW	DW	DW	DW	DW	DW	OFF	DW	DW	DW	DW	DW	DW	DW	DW	DW	DW	DW	DW
P5,P6	DW	DW	DW	DW	DW	DW	DW	DW	DW	DW	DW	DW	DW	DW	DW	DW	DW	DW	DW	DW	DW	DW	W	FDW	DW	DW	W	FDW	DW	DW	OFF	DW	DW	DW	DW	DW	DW	DW	DW	DW	DW	DW	DW
P7,P8	DW	DW	DW	DW	DW	DW	DW	DW	DW	DW	DW	DW	DW	DW	DW	DW	DW	DW	W	FDW	DW	DW	DW	DW	DW	DW	W	FDW	DW	DW	OFF	DW	DW	DW	DW	DW	DW	DW	DW	DW	DW	DW	DW

P:\98240002\DWG\signal\98027E03A.DWG.dwg – NOV 18, 1999 – 17:25:03

CALCULATED: --
CHECKED: --

US 36 / SR 29 AND JEFFERSON AVENUE
TRAFFIC SIGNAL PLAN

CHP-36-14.23
PID NO. 20258

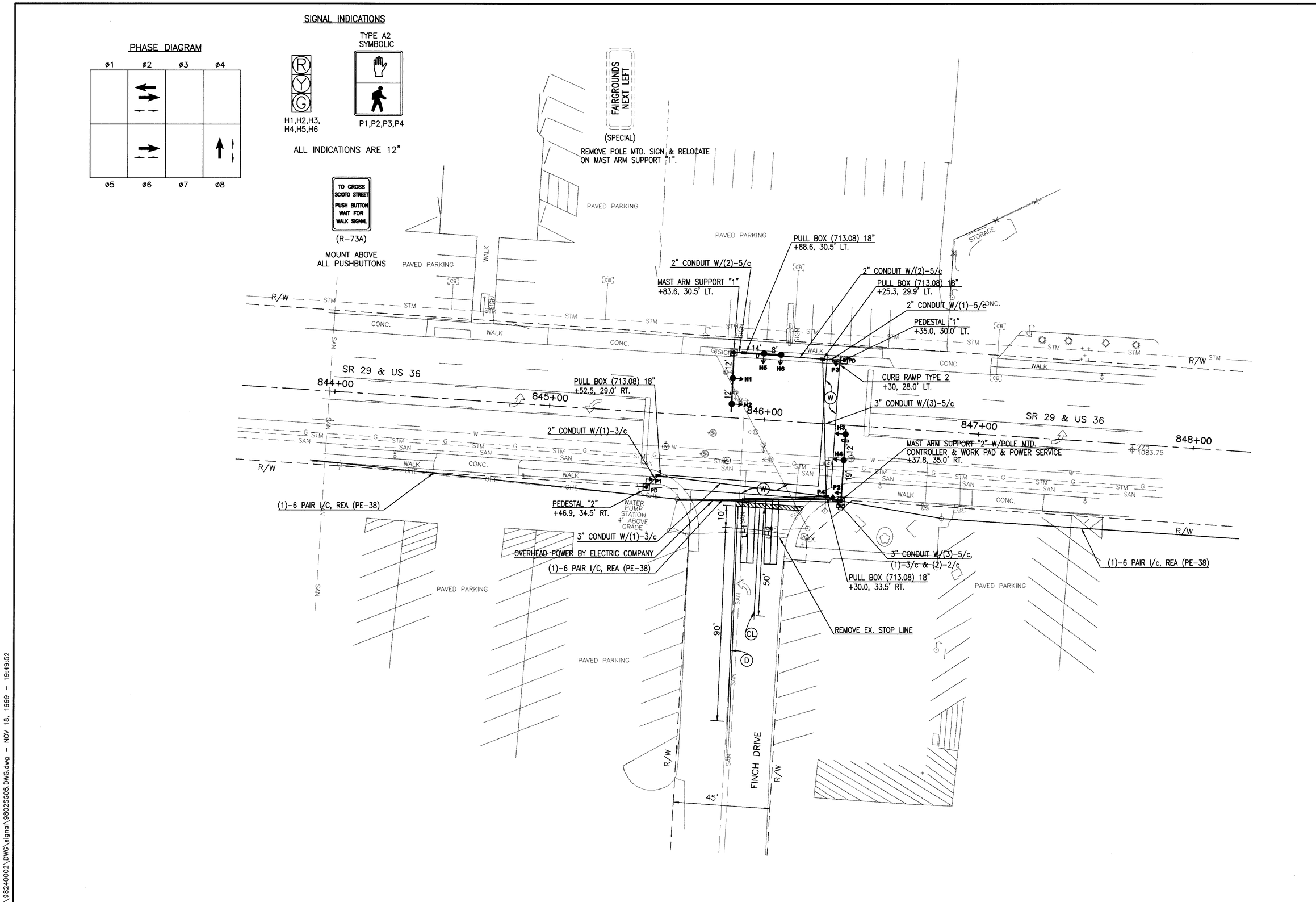

HORIZONTAL SCALE IN FEET
20 0 20

CALCULATED: --
CHECKED: --

US 36 / SR 29 AND FINCH DRIVE TRAFFIC SIGNAL PLAN

CHP-36-14.23
PID NO. 20258

P:\98240002\DWG\signal\9802SG05.DWG.dwg - NOV 18, 1999 - 19:49:52

DETECTOR ASSIGNMENTS

LOOP	SIZE	TURNS	MODE	MEMORY	(E)XTEND/ (D)ELAY (SEC.)	UNIT	CHANNEL	PHASE
L–1	6' x 30'	2–4–2	PRESENCE	NON–LOCK	D–5	1	1	8
L–2	6' x 30'	2–4–2	PRESENCE	NON–LOCK	D–5	1	2	8

NOTES:
ALL LOOPS ARE QUADROPOLE

REMOVAL OF TRAFFIC SIGNAL INSTALLATION

DESCRIPTION OF ITEM TO BE REMOVED BY CONTRACTOR	REMOVE AND SALVAGE	REMOVE AND DISPOSE
VEHICULAR SIGNAL HEADS (6)–3 SECTION, 1–WAY	X	
PEDESTAL MOUNTED CONTROL CABINET AND CONTROLLER	X	
(2) STRAIN POLES	X	
CABLE & WIRE		X

TRAFFIC CONTROL QUANTITIES

ITEM	EXT.	QTY.	UNITS	DESCRIPTION
608	50001	1	EACH	CURB RAMP, TYPE 2
625	25400	50	LF	CONDUIT, 2", 713.04
625	25500	150	LF	CONDUIT, 3", 713.04
625	29000	55	LF	TRENCH
625	29501	15	LF	TRENCH IN PAVED AREA, TYPE A, AS PER PLAN
625	29601	128	LF	TRENCH IN PAVED AREA, TYPE B
625	30700	4	EACH	PULL BOX, 713.08, 18"
625	32000	4	EACH	GROUND ROD
630	79500	3	EACH	SIGN SUPPORT ASSEMBLY, POLE MOUNTED
630	87520	1	EACH	REMOVAL OF POLE MOUNTED SIGN AND REERECTION
632	00300	6	EACH	VEHICULAR SIGNAL HEAD, 3 SECTION, 12" LENS, 1–WAY
632	20102	4	EACH	PEDESTRIAN SIGNAL HEAD, TYPE A2, AS PER PLAN
632	25000	6	EACH	COVERING OF VEHICULAR SIGNAL HEAD
632	26000	2	EACH	PEDESTRIAN PUSH BUTTON
632	26500	2	EACH	DETECTOR LOOP
632	27105	1	EACH	LOOP DETECTOR UNIT, 2 CHANNEL, DELAY AND EXTENSION TYPE, AS PER PLAN
632	40300	126	LF	SIGNAL CABLE, 3 CONDUCTOR, NO. 14 AWG
632	40500	593	LF	SIGNAL CABLE, 5 CONDUCTOR, NO. 14 AWG
632	62803	362	LF	INTERCONNECT CABLE, INTEGRAL MESSENGER WIRE TYPE, 6 PAIR, NO. 19 AWG, SOLID, REA (PE–38), AS PER PLAN
632	64010	2	EACH	SIGNAL SUPPORT FOUNDATION
632	64020	2	EACH	PEDESTAL FOUNDATION
632	65200	50	LF	LOOP DETECTOR LEAD–IN CABLE
632	68200	15	LF	POWER CABLE, 2 CONDUCTOR, NO. 6 AWG
632	70001	1	EACH	POWER SERVICE, AS PER PLAN
632	75011	1	EACH	SIGNAL SUPPORT, TYPE TC–81.20 DESIGN 3 POLE, WITH MAST ARMS TC–81.20 DESIGN 2 AND DESIGN 1, AS PER PLAN
632	80301	1	EACH	SIGNAL SUPPORT, TYPE TC–81.20, DESIGN 3, AS PER PLAN
632	89611	2	EACH	PEDESTAL, 9', AS PER PLAN
632	89400	1	EACH	DOWNGUY
632	90101	1	EACH	REMOVAL OF TRAFFIC SIGNAL INSTALLATION, AS PER PLAN
633	38001	1	EACH	CONTROLLER, ACTUATED, 8 PHASE, SOLID STATE DIGITAL MICROPROCESSOR, AS PER PLAN
633	70500	8.6	SF	CONTROLLER WORK PAD
633	99000	1	EACH	CONTROLLER, MISC.: PREEMPTION, AS PER PLAN
642	00302	0.038	MILE	CENTER LINE, TYPE 2
642	00402	56	LF	CHANNELIZING LINE, TYPE 2
644	00500	35	LF	STOP LINE
644	00600	245	LF	CROSSWALK LINE
644	30000	50	LF	REMOVAL OF PAVEMENT MARKING
633	99000	1	EACH	ALTERNATE BID: CONTROLLER, MISC.: PREEMPTION, AS PER PLAN

TIMING

PHASE	ø2	ø4	ø6
MOVEMENT	E/W	NB	E/W
MIN. GREEN	20	10	20
VEHICLE EXTENSION	–	2.0	–
MAX 1	50	25	50
MAX 2	–	–	–
YELLOW	3.5	3.5	3.5
ALL RED	1.0	1.0	1.0
WALK	6	6	6
PED. CLEAR	10	12	10
RECALL	MIN	–	MIN
CALL TO NON–ACTUATED	1	–	1

COORDINATION TIMING (SECONDS)

CYCLE/OFFSET	PHASE ø2	ø4	ø6		DESCRIPTION
70/6	45	25	45		12AM–6AM, 7 DAYS
75/7	50	25	50		6AM–10:30AM, M–F
75/69	50	25	50		10:30AM–7PM, M–F
70/49	45	25	45		7PM–12AM M–F 6AM–12AM, SA & SU

NOTES:
1. OFFSETS REFERENCED TO BEGINNING OF ø2 & ø6
2. ø2 & ø6 TO BE PROGRAMMED FOR DUAL ENTRY.

SIGNAL DISPLAY SCHEDULE

PHASE / SIGNAL	ø2 R/W	ø2 CLEARANCE			ø4 R/W	ø4 CLEARANCE			FLASH	PREEMPTION CALL WB R/W	PREEMPTION CALL WB CLEARANCE		PREEMPTION CALL NB R/W	PREEMPTION CALL NB CLEARANCE		PREEMPTION CALL EB R/W	PREEMPTION CALL EB CLEARANCE	
H1,H2	G	G	Y	R	R	R	R	R	Y	G	Y	R	R	R	R	R	R	R
H3,H4	G	G	Y	R	R	R	R	R	Y	R	R	R	R	R	R	G	Y	R
H5,H6	R	R	R	R	G	G	Y	R	R	R	R	R	G	Y	R	R	R	R
P1,P2	W	FDW	DW	DW	DW	DW	DW	DW	OFF	DW	DW	DW	DW	DW	DW	DW	DW	DW
P3,P4	DW	DW	DW	DW	W	FDW	DW	DW	OFF	DW	DW	DW	DW	DW	DW	DW	DW	DW

POLE ORIENTATION DATA CHART

SUPPORT NO.	POLE DESIGN NO.	MAST ARM DESIGN NO.	STATION & OFFSET	POLE HEIGHT (ft.)	PED SIGNALS	PED BUTTONS	HANDHOLE	CABLE ENTRANCE	POWER SERVICE	MAST ARM A ANGLE (DEG.)	MAST ARM B ANGLE (DEG.)	L (ft)	L1 (ft)	L2 (ft)	L3 (ft)		CONTROLLER
MAST ARM 1	3	2	845+83.6, 30.5' LT.	23	–	–	180	–	–	0	–	25	12	24	–		–
		1	–	–	–	–	–	–	–	–	270	23	14	22	–		–
MAST ARM 2	3	3	846+37.8, 35.0' RT.	23	0/270	270	180	180	90	0	–	32	19	31	–		180
PEDESTAL 1	–	–	846+35.0, 30.1' LT.	9	90	90	–	–	–	–	–	–	–	–	–		–
PEDESTAL 2	–	–	845+46.9, 34.5 RT.	9	0	–	–	–	–	–	–	–	–	–	–		–

WIRING DIAGRAM

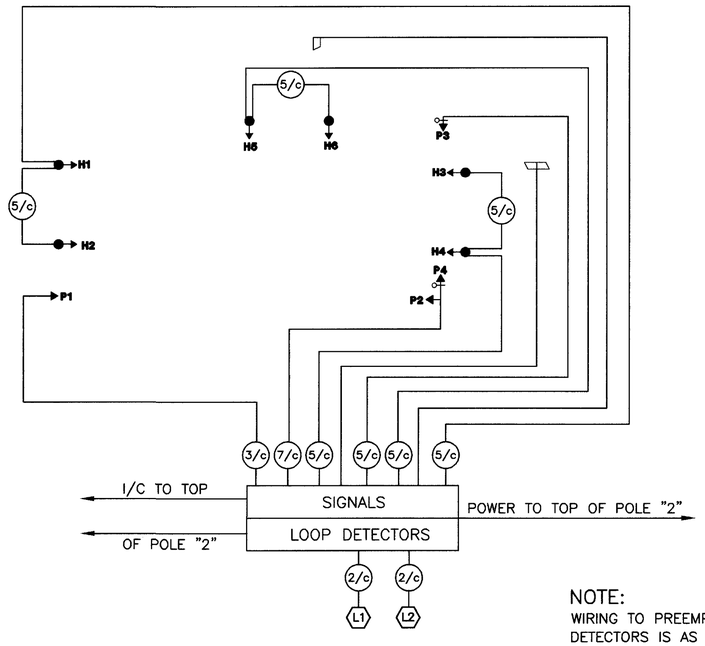

NOTE:
WIRING TO PREEMPTION DETECTORS IS AS SPECIFIED BY MANUFACTURER

CALCULATED: : :
CHECKED: : :

US 36 / SR 29 AND FINCH DRIVE
TRAFFIC SIGNAL PLAN

CHP-36-14.23
PID NO. 20258

P:\98240002\DWG\signal\98027B05.DWG - NOV 18, 1999 - 19:54:14

PHASE DIAGRAM

ø1 ø2 ø3 ø4

ø5 ø6 ø7 ø8

SIGNAL INDICATIONS

R
Y
G

H1,H2,H3,
H4,H5,H6

ALL INDICATIONS ARE 12"

2" CONDUIT W/(2)-5/c, (1)-2/c &
(1)- 6 PAIR I/C, REA (PE-38)

MAST ARM SUPPORT "1" W/POLE
MTD. CONTROLLER & WORKPAD
+52.5, 28.5' LT.

2" CONDUIT W/(1)-2/c POWER CABLE

POWER SERVICE
DP&L POLE 366636

REMOVE EX.
STOP LINE

REMOVE EX. CENTERLINE BETWEEN
EX. STOP LINE & NEW STOP LINE

SR 29 & US 36

861+00

862+00

863+00

864+00

EX. CONDUIT W/(2)-5/c, (1)-2/c &
(1)-6 PAIR I/C, REA (PE-38)

M1, M26

W-53R

2" CONDUIT W/(1)-5/c

EX. CONDUIT W/(1)-6 PAIR
I/C, REA (PE-38)

EX. CONDUIT W/(2)-5/c & (1)-2c

MAST ARM SUPPORT "3"
+01.7, 34.0' RT.

MAST ARM SUPPORT "2"
+99.0, 33.5' RT.

(1)-6 PAIR I/C, REA (PE-38)

EX.

2" CONDUIT W/(1)-6 PAIR,
I/C, REA (PE-38)

2" CONDUIT W/(1)-2/c

PULL BOX (713.08) 18"
+57.6, 56.7' RT.

2" CONDUIT RISER AND DOWNGUY ON POLE

SR 29

R/W

36

(M-1,M-26)

RIGHT LANE ENDS

(W-53R)

REMOVE MAST ARM MTD. SIGNS
AND RELOCATE ON MAST ARM "2".

HORIZONTAL
SCALE IN FEET
20 0 20

CALCULATED: --
CHECKED: --

US 36 AND SR 29
TRAFFIC SIGNAL PLAN

CHP-36-14.23
PID NO. 20258

49
50

P:\98240002\DWG\signal\9802SG06.DWG.dwg - NOV 18, 1999 - 19:56:22

DETECTOR ASSIGNMENTS

LOOP	SIZE	TURNS	MODE	MEMORY	(E)XTEND/(D)ELAY (SEC.)	UNIT	CHANNEL	PHASE
L–1	12' x 6'	3	PRESENCE	NON–LOCK	D–5	1	1	8
L–2	12' x 6'	3	PRESENCE	NON–LOCK	D–5	1	1	8
L–3	12' x 6'	3	PRESENCE	NON–LOCK	D–5	1	1	8

REMOVAL OF TRAFFIC SIGNAL INSTALLATION

DESCRIPTION OF ITEM TO BE REMOVED BY CONTRACTOR	REMOVE AND SALVAGE	REMOVE AND DISPOSE
VEHICULAR SIGNAL HEADS (6)–3 SECTION, 1–WAY	X	
POLE MOUNTED CONTROL CABINET AND CONTROLLER	X	
(3) MAST ARMS	X	
CABLE & WIRE		X

TRAFFIC CONTROL QUANTITIES

ITEM	EXT.	QTY.	UNITS	DESCRIPTION
625	25400	160	LF	CONDUIT, 2", 713.04
625	30700	1	EACH	PULL BOX, 713.08, 18"
625	32000	3	EACH	GROUND ROD
630	79100	2	EACH	SIGN HANGER ASSEMBLY, MAST ARM
630	87100	3	EACH	REMOVAL OF OVERHEAD MOUNTED SIGN AND REERECTION
632	00300	6	EACH	VEHICULAR SIGNAL HEAD, 3 SECTION, 12" LENS, 1–WAY
632	25000	6	EACH	COVERING OF VEHICULAR SIGNAL HEAD
632	26500	3	EACH	DETECTOR LOOP
632	27105	1	EACH	LOOP DETECTOR UNIT, 2 CHANNEL, DELAY AND EXTENSION TYPE, AS PER PLAN
632	40500	425	LF	SIGNAL CABLE, 5 CONDUCTOR, NO. 14 AWG
632	62803	325	LF	INTERCONNECT CABLE, INTEGRAL MESSENGER WIRE TYPE, 6 PAIR, NO. 19 AWG, SOLID, REA (PE–38), AS PER PLAN
632	64010	3	EACH	SIGNAL SUPPORT FOUNDATION
632	65200	241	LF	LOOP DETECTOR LEAD–IN CABLE
632	68200	75	LF	POWER CABLE, 2 CONDUCTOR, NO. 6 AWG
632	70001	1	EACH	POWER SERVICE, AS PER PLAN
632	70400	1	EA	CONDUIT RISER, 2 IN. DIAMETER
632	80101	1	EACH	SIGNAL SUPPORT, TYPE TC–81.20, DESIGN 1, AS PER PLAN
632	80201	2	EACH	SIGNAL SUPPORT, TYPE TC–81.20, DESIGN 2, AS PER PLAN
632	90101	1	EACH	REMOVAL OF TRAFFIC SIGNAL INSTALLATION, AS PER PLAN
633	38001	1	EACH	CONTROLLER, ACTUATED, 8 PHASE, SOLID STATE DIGITAL MICROPROCESSOR, AS PER PLAN
633	70500	8.6	SF	CONTROLLER WORK PAD
633	99000	1	EACH	CONTROLLER, MISC.: PREEMPTION, AS PER PLAN
642	30000	20	LF	REMOVAL OF PAVEMENT MARKING
644	00500	26	LF	STOP LINE
644	30000	26	LF	REMOVAL OF PAVEMENT MARKING
633	99000	1	EACH	ALTERNATE BID: CONTROLLER, MISC.: PREEMPTION, AS PER PLAN

TIMING

PHASE	ø2	ø4	ø6
MOVEMENT	WB	NB	EB
MIN. GREEN	20	10	20
VEHICLE EXTENSION	–	2.0	–
MAX 1	40	38	40
MAX 2	–	–	–
YELLOW	3.5	3.5	3.5
ALL RED	1.0	1.0	1.0
WALK	–	–	–
PED. CLEAR	–	–	–
RECALL	MIN	–	MIN
CALL TO NON–ACTUATED	1	–	1

COORDINATION TIMING (SECONDS)

CYCLE/OFFSET	PHASE ø2	PHASE ø4	PHASE ø6	DESCRIPTION
70/0	35	35	35	12AM–6AM, 7 DAYS
75/71	40	35	40	6AM–10:30AM, M–F
75/54	37	38	37	10:30AM–7PM, M–F
70/33	35	35	35	7PM–12AM M–F 6AM–12AM, SA & SU

NOTES:
1. OFFSETS REFERENCED TO BEGINNING OF ø2 & ø6
2. ø2 & ø6 TO BE PROGRAMMED FOR DUAL ENTRY.

SIGNAL DISPLAY SCHEDULE

PHASE / SIGNAL	ø2 & ø6 R/W	ø2 & ø6 CLEARANCE			ø4 R/W	ø4 CLEARANCE			FLASH	PREEMPTION CALL WB R/W	PREEMPTION CALL WB CLEARANCE		PREEMPTION CALL NB R/W	PREEMPTION CALL NB CLEARANCE		PREEMPTION CALL EB R/W	PREEMPTION CALL EB CLEARANCE	
H1,H2	G	G	Y	R	R	R	R	R	Y	G	Y	R	R	R	R	R	R	R
H3,H4	G	G	Y	R	R	R	R	R	Y	R	R	R	R	R	R	G	Y	R
H5,H6	R	R	R	R	G	G	Y	R	R	R	R	R	G	Y	R	R	R	R
–	–	–	–	–	–	–	–	–	–	–	–	–	–	–	–	–	–	–
–	–	–	–	–	–	–	–	–	–	–	–	–	–	–	–	–	–	–

POLE ORIENTATION DATA CHART

SUPPORT NO.	POLE DESIGN NO.	MAST ARM DESIGN NO.	STATION & OFFSET	POLE HEIGHT (ft.)	PED SIGNALS	PED BUTTONS	HANDHOLE	CABLE ENTRANCE	POWER SERVICE	MAST ARM A ANGLE (DEG.)	MAST ARM B ANGLE (DEG.)	L (ft)	L1 (ft)	L2 (ft)	L3 (ft)	L4 (ft)	CONTROLLER
MAST ARM 1	2	2	861+52.5, 28.5' LT.	23	–	–	180	–	–	0	–	25	12	24	–	–	180
MAST ARM 2	2	2	861+99, 33.5' RT.	23	–	–	180	–	–	0	–	27	14	17	23	26	–
MAST ARM 3	1	1	862+01.7, 34.0' RT.	23	–	–	180	–	–	24	–	21	10	20	–	–	–

WIRING DIAGRAM

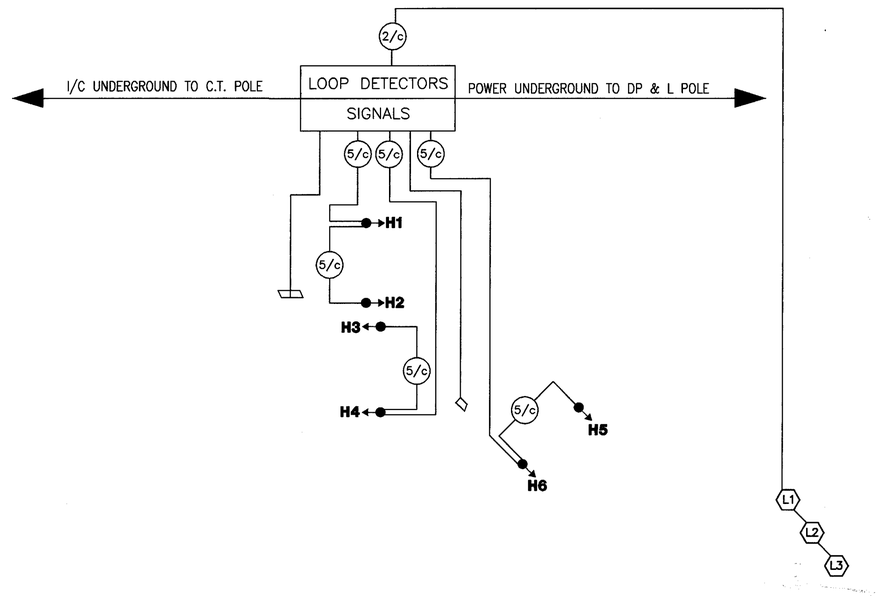

NOTE:
WIRING TO PREEMPTION DETECTORS IS AS SPECIFIED BY MANUFACTURER

CALCULATED: : :
CHECKED: : :

US 36 AND SR 29
TRAFFIC SIGNAL PLAN

CHP-36-14.23
PID NO. 20258

50
50

P:\98240002\DWG\signal\98027B06.DWG.dwg – NOV 18, 1999 – 19:57:59

STATE OF OHIO
DEPARTMENT OF TRANSPORTATION
CHP-36-14.23
CITY OF URBANA
CHAMPAIGN COUNTY

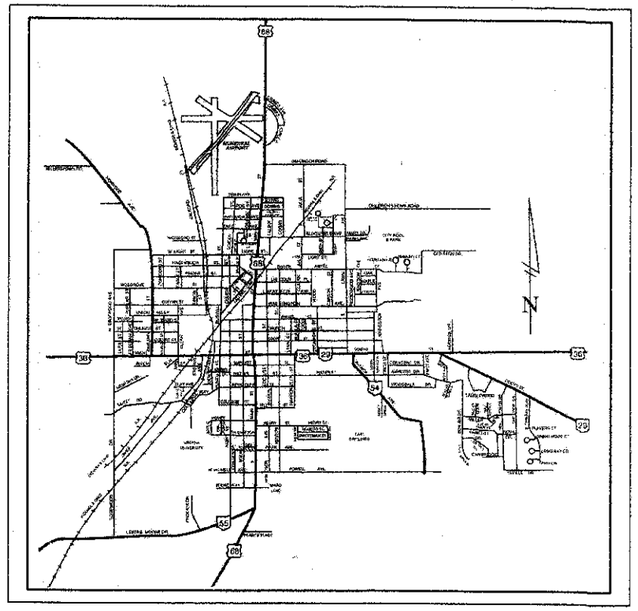

LOCATION MAP

LATITUDE 39?28'15" LONGITUDE 84?20'15"

0 1/4 1/2" 3/4" 1

SCALE IN MILES

N

PORTION TO BE IMPROVED
STATE & FEDERAL ROUTES
OTHER ROADS
COUNTY LINE

DESIGN DESIGNATION

	US68 / US 36
CURRENT ADT (2000)	17110
DESIGN YEAR ADT (2020)	21130
DESIGN HOURLY VOLUME (2020)	1902
DIRECTIONAL DISTRIBUTION	0.55
TRUCKS (24 HOUR B&C)	0.05
DESIGN SPEED	35 MPH (US68)
LEGAL SPEED	35 MPH (US68)
FUNCTIONAL CLASSIFICATION	* ARTERIAL (URBAN)

DESIGN EXCEPTIONS

NONE

UNDERGROUND UTILITIES
TWO WORKING DAYS
BEFORE YOU DIG
CALL 1-800-362-2764 (TOLL FREE)
OHIO UTILITIES PROTECTION SERVICE
NON-MEMBERS
MUST BE CALLED DIRECTLY

Prepared By:
Dodson - Stilson, Inc.
A DLZ Company
Engineers-Architects-Scientists
211 South Main Street,
Dayton, Ohio 45402

ENGINEERING SEAL
FOR ENTIRE PLAN

STATE OF OHIO
MATTHEW MILLER
E-64151
REGISTERED
PROFESSIONAL ENGINEER

SIGNED Matthew Miller
DATE: 11/19/99

INDEX OF SHEETS

TITLE SHEET.....1
GENERAL NOTES.....2-6
GENERAL SUMMARY.....7-8
LEGEND AND MISCELLANEOUS DETAILS.....9
TRAFFIC SIGNAL INTERCONNECT PLANS.....10-15
TRAFFIC SIGNAL PLANS.....16-49A
DEMOLISHING AND STREETSCAPE PLANS.....49B-50

PROJECT DESCRIPTION

THIS PROJECT CONSISTS OF REPLACEMENT OF 20 TRAFFIC SIGNALS ALONG US 36 AND US 68 IN THE CITY OF URBANA. REPLACEMENT OF ALL TRAFFIC SIGNALS AND EQUIPMENT AT THESE LOCATIONS.

1997 SPECIFICATIONS

THE STANDARD SPECIFICATIONS OF THE STATE OF OHIO, DEPARTMENT OF TRANSPORTATION, INCLUDING CHANGES AND SUPPLEMENTAL SPECIFICATIONS LISTED IN THE PROPOSAL SHALL GOVERN THIS IMPROVEMENT.

I HEREBY APPROVE THESE PLANS AND DECLARE THAT THE MAKING OF THIS IMPROVEMENT WILL NOT REQUIRE THE CLOSING TO TRAFFIC OF THE HIGHWAY AND THAT PROVISIONS FOR THE MAINTENANCE AND SAFETY OF TRAFFIC WILL BE AS SET FORTH ON THE PLANS AND ESTIMATES.

APPROVED William L. Harrison P&M
DATE 11-24-99 **DISTRICT DEPUTY DIRECTOR**

APPROVED
DATE **DIRECTOR, DEPARTMENT OF TRANSPORTATION**

APPROVED Jay A. Darby
DATE 11/23/99 **CITY ENGINEER**

STANDARD CONSTRUCTION DRAWINGS									SUPPLEMENTAL SPECIFICATIONS	
DWG. NO.	DATE	DWG. NO.	DATE	DWG. NO.	DATE	DWG. NO.	DATE		
BP-5.1M	10/28/94	TC-41.41M	03/31/94	TC-83.20M	11/24/93	MT-110.20M	03/01/96	830	10/21/98
BP-7.1M	10/28/94	TC-41.50M	07/01/94	TC-84.20M	11/24/93			842	1/6/99
		TC-42.20M	03/31/94	TC-85.10M	11/24/93	HL-10.11M	05/01/95	863	9/9/97
HL-20.11M	03/31/95	TC-52.10M	07/29/94	TC-85.20M	11/24/93	HL-10.12M	05/01/95	899	1/6/97
HL-30.11.M	03/31/95	TC-52.20M	07/29/94			HL-60.11M	05/01/95	905	4/1/98
HM-30.22M	03/31/95	TC-71.10M	09/01/93	MT-35.10M	01/30/95			907	10/21/98
		TC-81.10M	12/10/96	MT-35.11M	01/30/95	TC-22.10M	02/01/94	1063	4/16/96
TC-21.20M	12/10/96	TC-81.20M	11/24/93	MT-97.10M	04/25/94				
TC-41.20M	07/01/94	TC-82.10M	11/24/93	MT-105.10M	04/25/94				
TC-41.40M	03/31/94	TC-83.10M	11/24/93	MT-105.11M	04/25/94				

FEDERAL PROJECT NO.	TE21-G000(122)
PID NO.	20258
CONSTRUCTION PROJECT NO.	-
RAILROAD INVOLVEMENT	NONE
	CHP-36-14.23
	1 / 50

P:\98240002\DWG\With Utilities\URBCV01.DWG.dwg -- NOV 18, 1999 -- 18:29:36

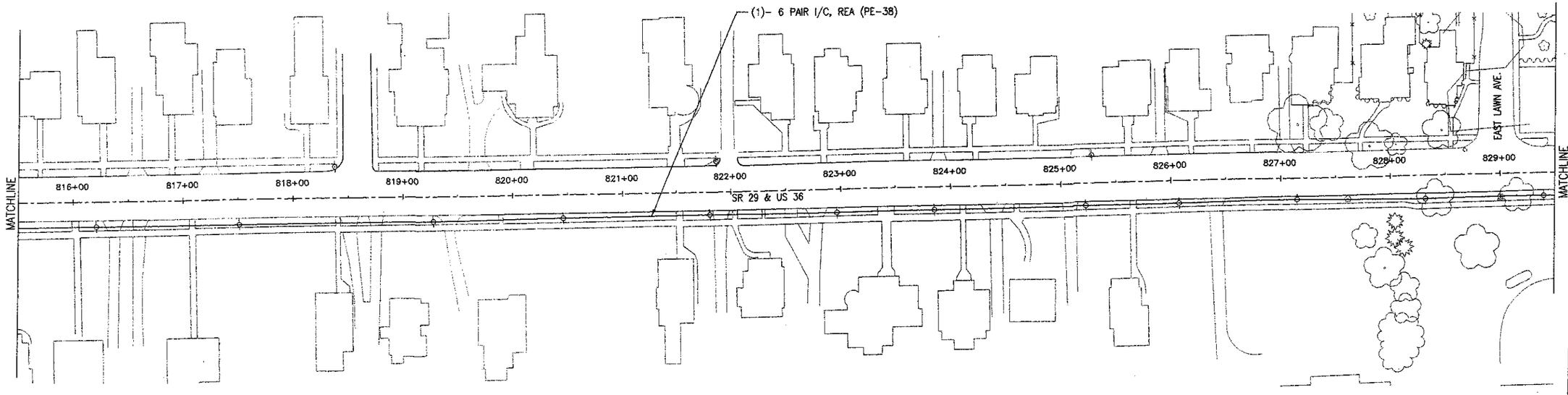

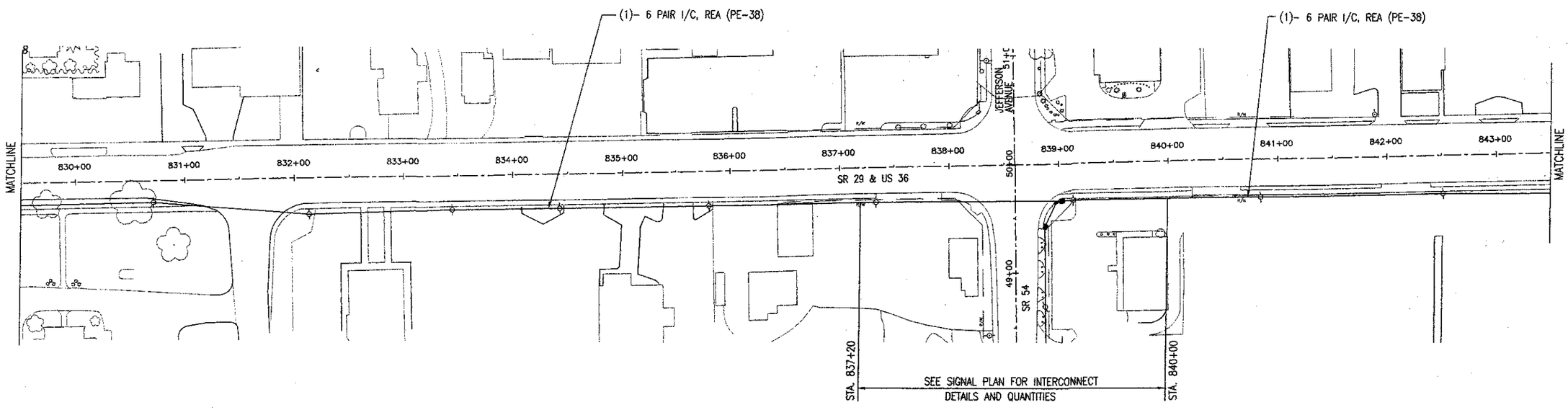

HORIZONTAL SCALE IN FEET
80 0 80

CALCULATED: [illegible] 2/00
CHECKED: [illegible] 2/00

TRAFFIC SIGNAL INTERCONNECT PLAN

CHP-36-14.23
PID NO. 20258

14
50

P:\36240002\DWG\SIGNAL\PCP05012.DWG.dwg - FEB 18, 2000 - 11:23:42

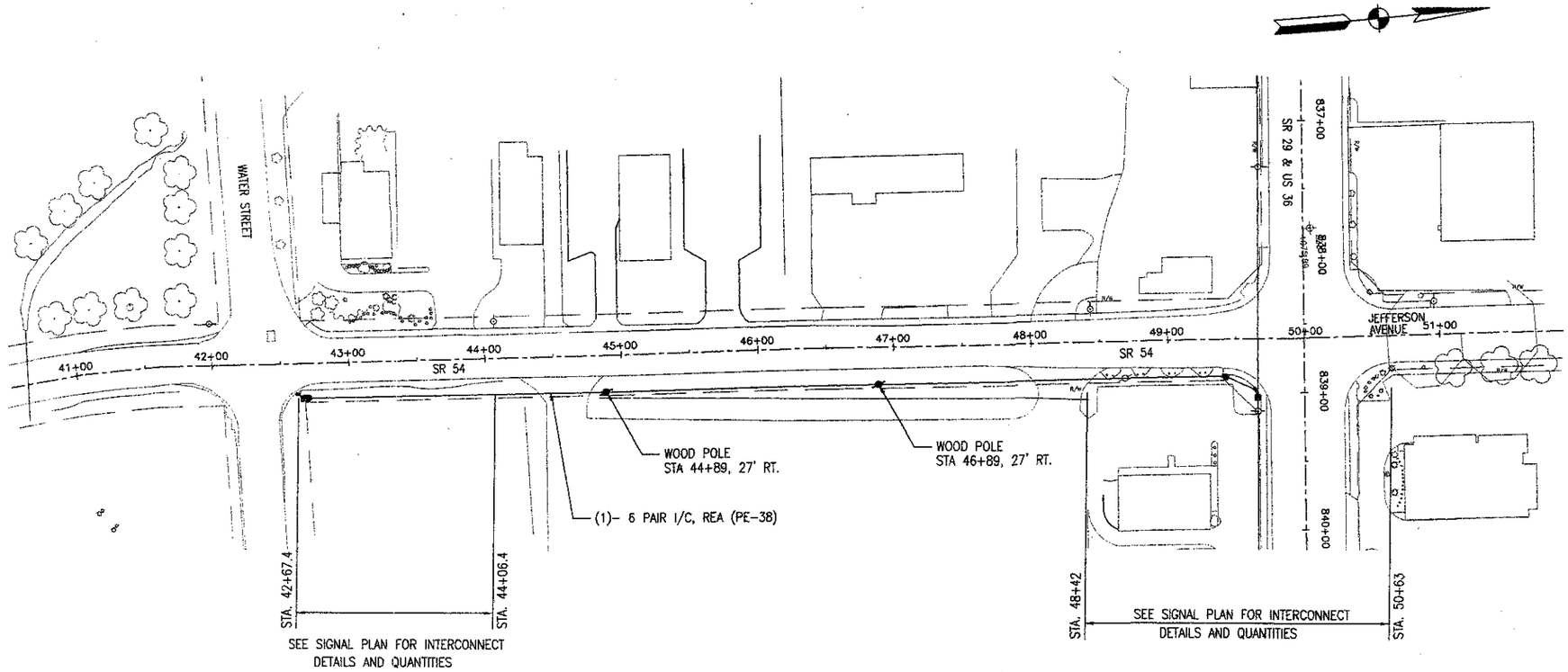

HORIZONTAL SCALE IN FEET
0 50

CALCULATED TNR 2/00
CHECKED MM 2/00

TRAFFIC SIGNAL INTERCONNECT PLAN

CHP-36-14.23
PID NO. 20258

14a
50

P:\98240002\DWG\SIGNAL\PCP05003.DWG.dwg -- FEB 18, 2000 -- 11:23:40

PHASE DIAGRAM

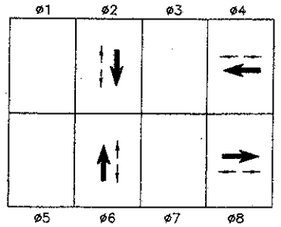

SIGNAL INDICATIONS

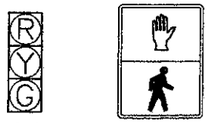

H1,H2,H3,H4,
H5,H6,H7,H8

P1,P2,P3,P4,
P5,P6,P7,P8

ALL INDICATIONS ARE 12"

(R-73A)

MOUNT ABOVE
ALL PUSHBUTTONS

(R-26A)

REMOVE SPAN MTD. SIGN AND
RELOCATE TO MAST ARM "2"

MOUNT R-26A-30 ON MAST ARM "4".

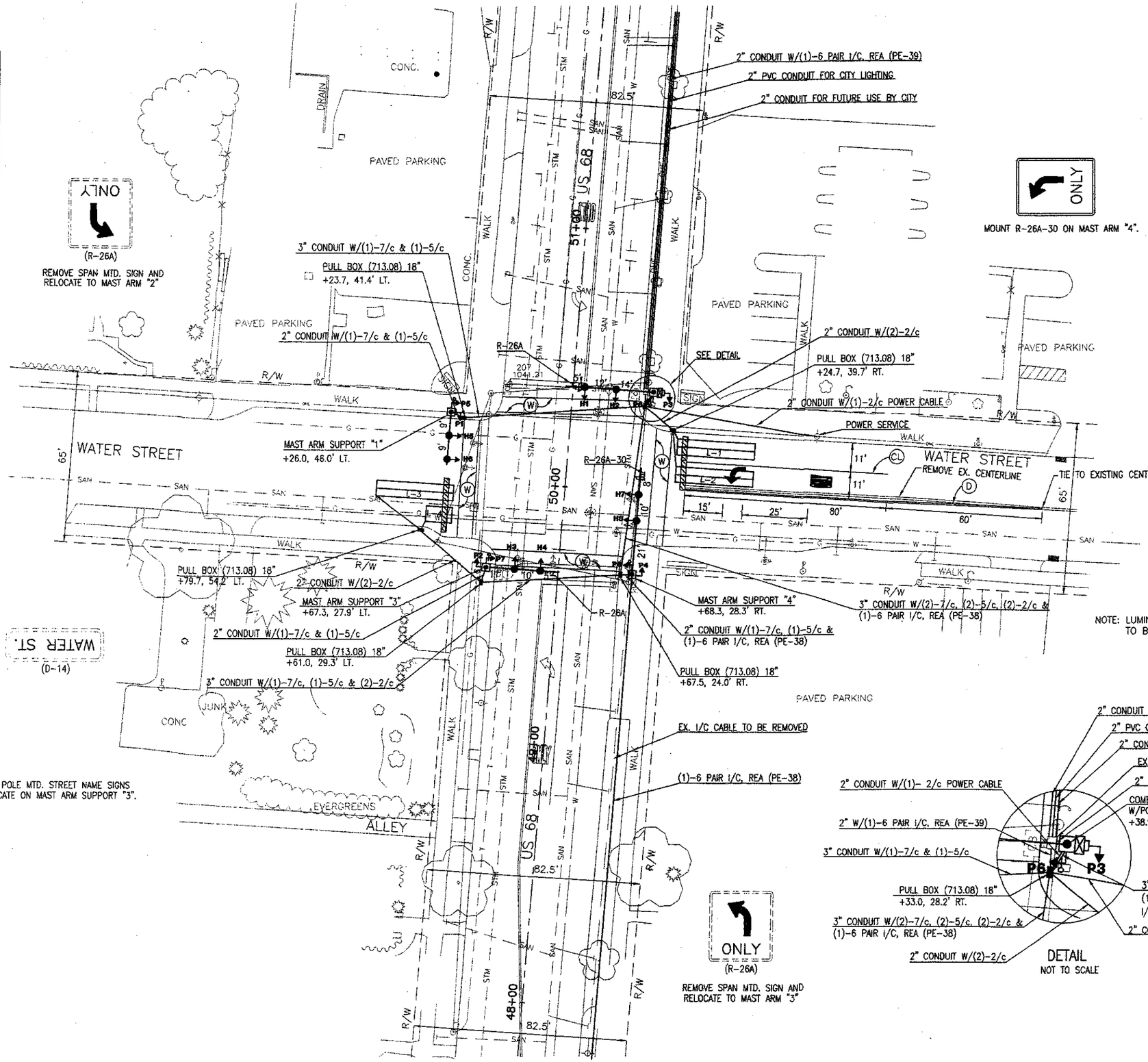

N

HORIZONTAL
SCALE IN FEET
20
0
20

CALCULATED: TNM 2/00
CHECKED: MMM 2/00

US 68 AND WATER STREET
TRAFFIC SIGNAL PLAN

CHP-36-14.23
PID NO. 20258

24
50

ADDENDUM #1 DATED 02-25-2000

P:\98240002\DWG\signal\98023G11.DWG.dwg - NOV 18, 1999 - 19:39:19

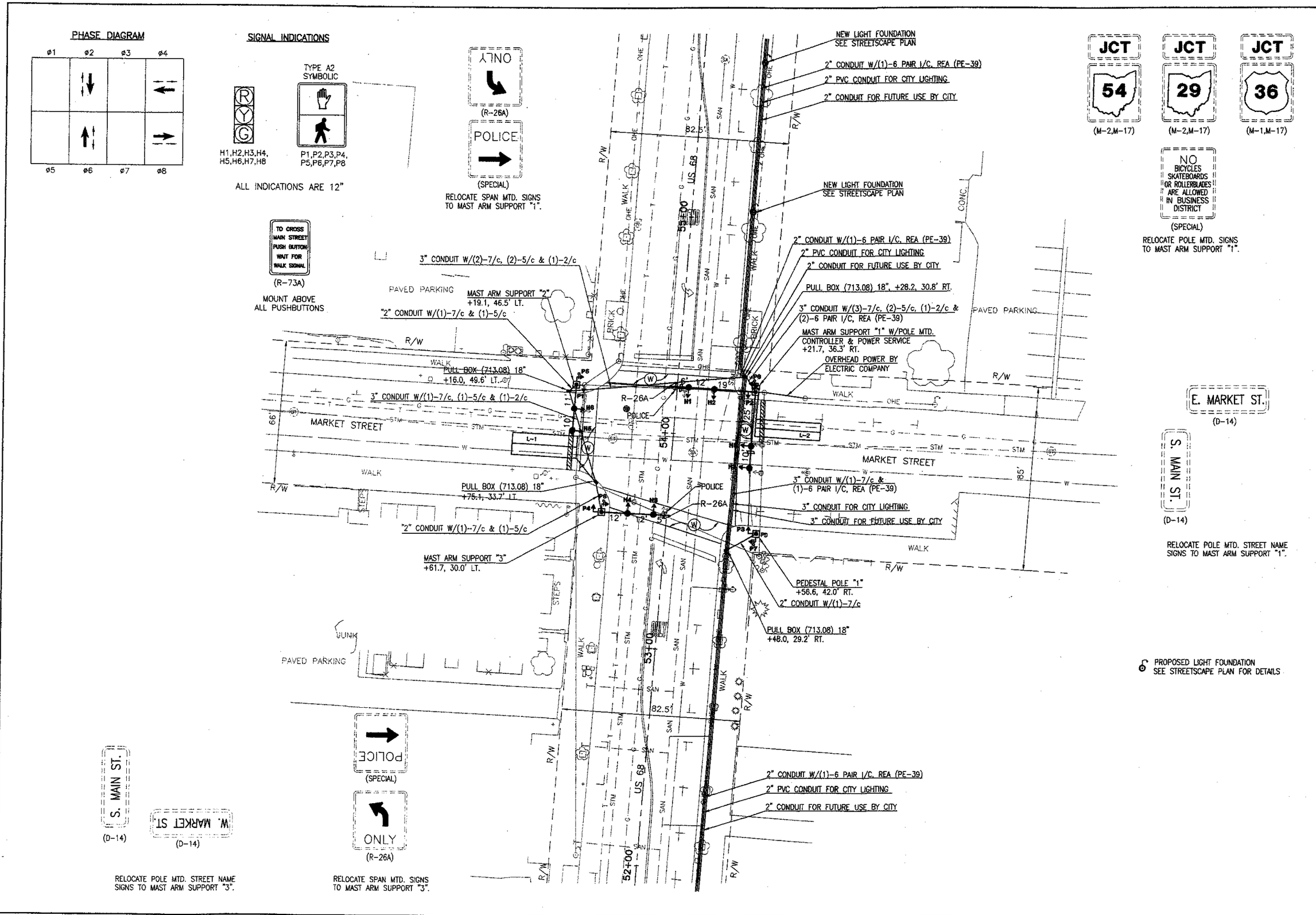

US 68 AND MARKET STREET TRAFFIC SIGNAL PLAN

CHP-36-14.23
PID NO. 20258

ADDENDUM #1 DATED 02-25-2000

P:\98240002\DWG\signal\9802SG12.DWG.dwg - NOV 18, 1999 - 15:00:12

PHASE DIAGRAM

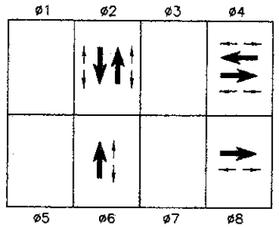

SIGNAL INDICATIONS

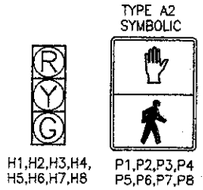

ALL INDICATIONS ARE 12"

NEW LIGHT FOUNDATION SEE STREETSCAPE PLANS

EX. CONDUIT FOR DP & L USE

COMBINATION STRAIN POLE "5" ON EX. FOUNDATION

2" PVC CONDUIT FOR CITY LIGHTING

2" CONDUIT W/(1)-3/c CONNECT TO EX. 2" FOUNDATION ELL.

PULL BOX (713.08) 18" +96.4, 33.3' LT.

2" CONDUIT W/(1)-5/c

MAST ARM SUPPORT "1" +87.1, 33.1' LT. "A"

PULL BOX (713.08) 18" +29.5, 28.1' LT.

2" PVC CONDUIT FOR DP & L USE

2" CONDUIT W/(1)-3/c ,CONNECT TO EX. 2" FOUNDATION ELL.

COMBINATION STRAIN POLE "12" ON EX. FOUNDATION

EX. CONDUIT FOR DP & L USE

3" CONDUIT FOR CITY LIGHTING

3" CONDUIT W/(1)-3/c

3" CONDUIT FOR FUTURE USE BY CITY

2" CONDUIT W/ (1)-6 PAIR I/C, REA (PE-39)

2" PVC CONDUIT FOR CITY LIGHTING

2" CONDUIT FOR FUTURE USE BY CITY

NEW LIGHT FOUNDATIONS SEE STREETSCAPE PLANS

EX. CONDUIT FOR DP & L USE

COMBINATION STRAIN POLE "11" ON EX. FOUNDATION

2" CONDUIT W/(1)-6 PAIR I/C, REA (PE-39)

2" PVC CONDUIT FOR CITY LIGHTING

2" CONDUIT FOR FUTURE USE BY CITY

2" CONDUIT W/(1)-3/c CONNECT TO EX. 2" FOUNDATION ELL.

PULL BOX (713.08) 18", +65.4, 127.1' LT.

2" CONDUIT W/(1)-5/c

MAST ARM SUPPORT "4", +68.9, 116.6' LT. "A"

2" CONDUIT W/(1)-5/c, (2)-3/c & (1)-6 PAIR I/C, REA (PE-39)

2" PVC CONDUIT FOR CITY LIGHTING

2" CONDUIT FOR FUTURE USE BY CITY

PULL BOX (713.08)18", +08.5, 125.6' LT.

2" CONDUIT W/(1)-5/c, (2)-3/c & (1)-6 PAIR I/C, REA (PE-39)

2" PVC CONDUIT FOR CITY LIGHTING

2" CONDUIT FOR FUTURE USE BY CITY

STREET LIGHT TO BE REPLACED BY CITY

NOTE: LUMINAIRES ON COMBINATION POLES TO BE PROVIDED BY OTHERS.

NOTES:
1. SEE SHEET 29 FOR SIGNING PLANS
2. CONTRACTOR TO COORDINATE WITH DP & L FOR INSTALLATION/REPLACEMENT OF STREET LIGHTS AND TRANSFER OF LUMINARIES TO NEW COMBINATION STRAIN POLES

MAST ARM ISLAND SEE DETAIL SHEET 9

R-23

EX. STOP LINE TO BE REMOVED

NEW LIGHT FOUNDATIONS SEE STREETSCAPE PLANS

STREET LIGHT TO BE REPLACED BY DP & L

+38.1, 10.8' LT. "A"

+29.6, 8.0' LT. "A"

+40.4, 0.0' RT. "A"

+37.8, 11.8' RT. "A"

EX. CHANNELIZATION LINE & ARROWS TO BE REMOVED

+49.7, 17.3' LT. "B"

+06.1, 8.0' LT. "B"

+13.4, 22.4' LT. "B"

+46.6, 0.0' RT. "B"

+19.6, 0.0' LT. "B"

+14.4, 21.0' RT. "B"

+50.6, 18.8' RT. "B"

+60.1, 8.1' RT. "B"

+67.5, 10.5' LT. "A"

+65.5, 0.0' LT. "A"

+67.8, 11.0' RT. "A"

+75.8, 8.1' RT. "A"

PULL BOX (713.08) 24" +09.5, 35.5' LT.

2" CONDUIT W/(1)-3/c , CONNECT TO EX. 2" FOUNDATION ELL.

2" PVC CONDUIT FOR CITY LIGHTING

COMBINATION STRAIN POLE "10"

EX. CONDUIT FOR DP & L USE ON EX. FOUNDATION

3" CONDUIT W/(1)-5/c, (3)-3/c & (1)-6 PAIR I/C, REA (PE-39)

3" CONDUIT FOR CITY LIGHTING

3" CONDUIT FOR FUTURE USE BY CITY

MAST ARM SUPPORT "3" +19.2, 33.6' RT. "A"

2" CONDUIT W/(1)-5/c

PULL BOX (713.08) 18" +10.8, 126.0' RT.

CONTROLLER +17.9, 33.6' RT. "A" (SEE DETAIL)

2" CONDUIT W/(1)-6 PAIR I/C, REA (PE-39)

2" PVC CONDUIT FOR CITY LIGHTING

2" CONDUIT FOR FUTURE USE BY CITY

2" CONDUIT W/(1)-5/c, (2)-3/c & (1)-6 PAIR I/C, REA (PE-39)

2" PVC CONDUIT FOR CITY LIGHTING

2" CONDUIT FOR FUTURE USE BY CITY

PULL BOX (713.08) 18" +98.3, 125.9' RT.

2" CONDUIT W/(1)-5/c, (2)-3/c & (1)-6 PAIR I/C, REA (PE-39)

2" PVC CONDUIT FOR CITY LIGHTING

2" CONDUIT FOR FUTURE USE BY CITY

MAST ARM SUPPORT "2", +39.9, 116.0' RT. "A"

2" CONDUIT W/(1)-5/c

PULL BOX (713.08) 18" +40.2, 127.6' RT. "A"

2" CONDUIT W/(1)-3/c, CONNECT TO EX. 2" FOUNDATION ELL.

2" PVC CONDUIT FOR DP & L USE

COMBINATION STRAIN POLE "7" ON EX. FOUNDATION

EX. CONDUIT FOR DP & L USE

3" CONDUIT W/(2)-5/c, (3)-3/c & (1)-6 PAIR I/C, REA (PE-39)

3" CONDUIT FOR CITY LIGHTING

3" CONDUIT FOR FUTURE USE BY CITY

NEW LIGHT FOUNDATIONS SEE STREETSCAPE PLANS

EX. CONDUIT FOR DP & L USE

COMBINATION STRAIN POLE "6" ON EX. FOUNDATION

2" PVC CONDUIT FOR CITY LIGHTING

2" CONDUIT W/(1)-6 PAIR I/C, REA (PE-39)

2" CONDUIT FOR FUTURE USE BY CITY

2" CONDUIT W/(1)-3/c, CONNECT TO EX. 2" FOUNDATION ELL.

PULL BOX (713.08) 18" +97.3, 35.1' RT. "A"

2" CONDUIT W/(1)-5/c, (2)-3/c & (1)-6 PAIR I/C, REA (PE-39)

2" PVC CONDUIT FOR CITY LIGHTING

2" CONDUIT FOR FUTURE USE BY CITY

EX. CONDUIT FOR DP & L USE

COMBINATION STRAIN POLE "8" ON EX. FOUNDATION

2" CONDUIT W/(1)-6 PAIR I/C, REA (PE-39)

2" PVC CONDUIT FOR CITY LIGHTING

2" CONDUIT FOR FUTURE USE BY CITY

2" CONDUIT W/(1)-3/c, CONNECT TO EX. 2" FOUNDATION ELL.

PULL BOX (713.08) 18" +69.0, 126.8' RT. "A"

3" CONDUIT W/(2)-5/c, (4)-3/c & (2)-6 PAIR I/C, REA (PE-39)

2" PVC CONDUIT FOR CITY LIGHTING

2" CONDUIT FOR FUTURE USE BY CITY

3" CONDUIT W/(4)-6 PAIR I/C, REA (PE-39)

3" CONDUIT W/(3)-5/c & (8)-3/c

2" CONDUIT W/(1)-2/c POWER CABLE

3" CONDUIT W/(2)-5/c, (4)-3/c & (2)-6 PAIR I/C, REA (PE-39)

2" PVC CONDUIT FOR CITY LIGHTING

2" CONDUIT FOR FUTURE USE BY CITY

2" CONDUIT W/(1)-3/c CONNECT TO EX. 2" FOUNDATION ELL.

COMBINATION STRAIN POLE "9" W/POWER SERVICE ON EX. FOUNDATION

EX. CONDUIT W/ (1)-2/c POWER CABLE BY CONTRACTOR LUMINAIRE CABLE BY DP&L

PULL BOX (713.08) 24" +08.7, 28.9' RT. "A"

3" CONDUIT W/(1)-5/c, (3)-3/c & (1)-6 PAIR I/C, REA (PE-39)

3" CONDUIT FOR CITY LIGHTING

3" CONDUIT FOR FUTURE USE BY CITY

NEW LIGHT FOUNDATIONS SEE STREETSCAPE PLANS

2" CONDUIT W/(1)-6 PAIR I/C, REA (PE-39)

2" PVC CONDUIT FOR CITY LIGHTING

3" CONDUIT W/ (1)-2/c POWER CABLE

DETAIL NOT TO SCALE

PROPOSED LIGHT FOUNDATION SEE STREETSCAPE PLAN FOR DETAILS

US 68, 795+00, 796+00, 797+00, 798+00, 799+00, 56+00, 57+00, 58+00, 59+00, 60+00, SR 29 & US 36, LINE "A", LINE "B", 82.5', 15', 16', 12', 8', 4', 3', 12', SPECIAL, BRICK, WALK, SAN, STM, OHE, G, T, E, W, R/W, CL

HORIZONTAL SCALE IN FEET 0 20 50

CALCULATED TRM 2/00
CHECKED BBM 2/00

US 68 AND US 36 / SR 29
TRAFFIC SIGNAL PLAN

CHP-36-14.23
PID NO. 20258

28
50

ADDENDUM #1 DATED 02-25-2000

P:\98240002\DWG\signal\98025G13.DWG.dwg - NOV 18, 1999 - 20:27:53

WEST 29 (M-40,M-2)

WEST 36 (M-40,M-1)

REMOVE FROM AND REERECT ON COMBINATION STRAIN POLE "12"

68 (M-1,M-25)

55 (M-2,M-24)

REMOVE FROM AND REERECT ON COMBINATION STRAIN POLE "5"

NO TURN ON RED (R-23)

ALL TRAFFIC KEEP RIGHT (SPECIAL)

REMOVE SPAN MTD. SIGNS AND RELOCATE TO MAST ARM "1"

W-76AP-30

REMOVE SPAN MTD. SIGN AND RELOCATE TO COMBINATION STRAIN POLE "12"

W-76AP-30

REMOVE SPAN MTD. SIGN AND RELOCATE TO COMBINATION STRAIN POLE "6"

36 29 54 (M-1,M-25) (M-2,M-25) (M-2,M-24)

REMOVE FROM AND REERECT ON COMBINATION STRAIN POLE "6"

NO TURN ON RED (R-23)

ALL TRAFFIC KEEP RIGHT (SPECIAL)

REMOVE SPAN MTD. SIGNS AND RELOCATE TO MAST ARM "2"

END 54 (M-14,M-2)

REMOVE FROM AND REERECT ON COMBINATION STRAIN POLE "7"

ALL TRAFFIC KEEP RIGHT (SPECIAL)

NO TURN ON RED (R-23)

REMOVE SPAN MTD. SIGNS AND RELOCATE TO MAST ARM "4"

29 36 (M-25,M-2) (M-25,M-1)

54 55 (M-26,M-2) (M-24,M-2)

REMOVE FROM AND REERECT ON COMBINATION STRAIN POLE "10"

W-76AP-30

REMOVE SPAN MTD. SIGN AND RELOCATE TO COMBINATION STRAIN POLE "10"

ALL TRAFFIC KEEP RIGHT (SPECIAL)

NO TURN ON RED (R-23)

REMOVE SPAN MTD. SIGNS AND RELOCATE TO MAST ARM "3"

END 55 (M-14,M-2)

54 (M-26,M-2)

68 (M-25,M-1)

55 (M-24,M-2)

REMOVE FROM AND REERECT ON COMBINATION STRAIN POLE "9"

36 EAST (M-39,M-1)

29 EAST (M-39,M-2)

54 SOUTH (M-38,M-2)

REMOVE FROM AND REERECT ON COMBINATION STRAIN POLE "8"

W-76AP-30

REMOVE SPAN MTD. SIGN AND RELOCATE TO COMBINATION STRAIN POLE "8"

NO TURN ON RED (R-23)

ALL TRAFFIC KEEP RIGHT (SPECIAL)

REMOVE 4 SETS OF SIGNS FROM PEDESTALS AROUND MONUMENT

NOTE:
SEE SHEET 28 FOR SIGNAL AND MACKING INFORMATION.

SR 29 & US 36

US 68

82.5'

WALK

R/W

SAN

OHE

G 208 1052.60

HORIZONTAL SCALE IN FEET 20 0 20

CALCULATED: TRR 2/00 CHECKED: MMM 2/00

US 68 AND US 36 / SR 29
TRAFFIC SIGNAL PLAN

CHP-36-14.23
PID NO. 20258

29
50

ADDENDUM #1 DATED 02-25-2000

P:\98240002\DWG\signal\B802S13A.DWG - NOV 17, 1998 - 15:26:23

PHASE DIAGRAM

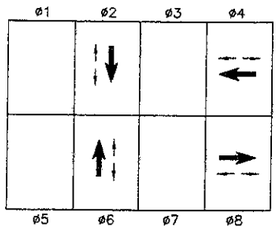

SIGNAL INDICATIONS

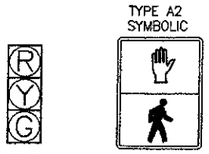

H1,H2,H3,H4,
H5,H6,H7,H8

TYPE A2
SYMBOLIC

P1,P2,P3,P4,
P5,P6,P7,P8

ALL INDICATIONS ARE 12"

(R-73A)

MOUNT ABOVE
ALL PUSHBUTTONS

(R-26A)

REMOVE SPAN MTD. SIGN AND
RELOCATE ON MAST ARM "2".

(N-29,IM-21-21)

REMOVE POLE MTD. SIGNS AND
RELOCATE ON MAST ARM SUPPORT "2".

(D-14)

(D-14)

REMOVE POLE MTD. STREET NAME SIGNS AND
RELOCATE ON MAST ARM SUPPORT "2".

(SPECIAL)

REMOVE POLE MTD. SIGN
AND RELOCATE ON SUPPORT "2".

(SPECIAL)

REMOVE POLE MTD. SIGN
AND RELOCATE ON SUPPORT "4".

(D-14)

(D-14)

REMOVE POLE MTD. STREET NAME SIGNS AND
RELOCATE ON MAST ARM SUPPORT "3".

(R-26A)

REMOVE SPAN MTD. SIGN AND
RELOCATE ON MAST ARM "3".

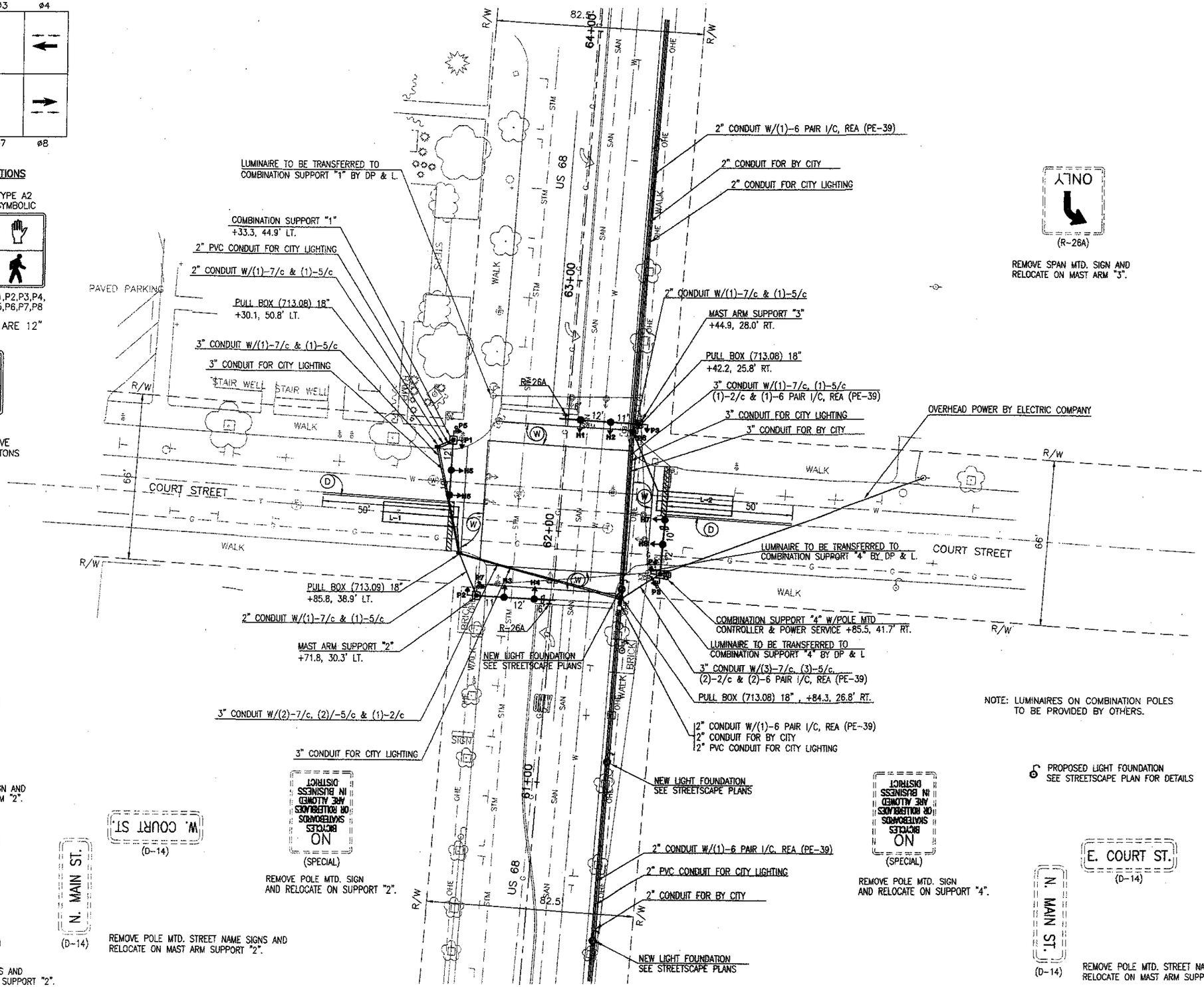

ADDENDUM #1 DATED 03-25-2000

P:\98240002\DWG\signal\98025G16.DWG - NOV 18, 1999 - 16:57:11

HORIZONTAL SCALE IN FEET
20 0 20

CALCULATED: TMB 2/00
CHECKED: MMM 2/00

US 68 AND COURT STREET
TRAFFIC SIGNAL PLAN

CHP-36-14.23
PID NO. 20258

31
50

PHASE DIAGRAM

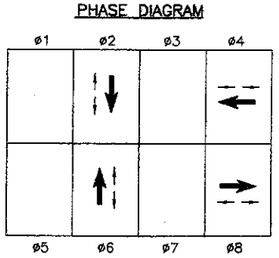

SIGNAL INDICATIONS

H1,H2,H3,H4,
H5,H6,H7,H8

TYPE A2
SYMBOLIC

P1,P2,P3,P4,
P5,P6,P7,P8

ALL INDICATIONS ARE 12"

(R-73A)

MOUNT ABOVE
ALL PUSHBUTTONS

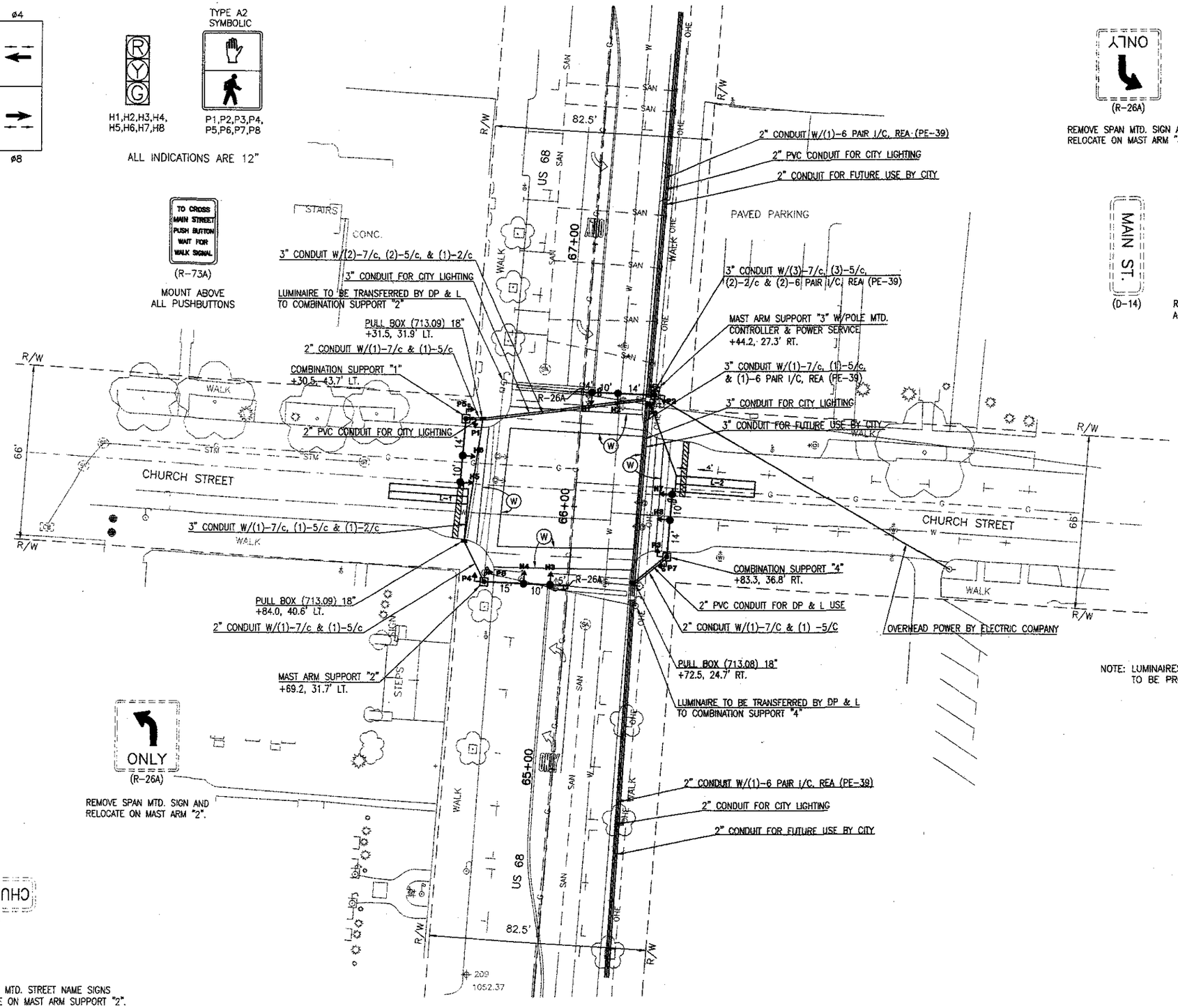

ONLY
(R-26A)

REMOVE SPAN MTD. SIGN AND
RELOCATE ON MAST ARM "3".

MAIN ST.
(D-14)

CHURCH ST.
(D-14)

REMOVE POLE MTD. STREET NAME SIGNS
AND RELOCATE ON MAST ARM SUPPORT "3".

NOTE: LUMINAIRES ON COMBINATION POLES
TO BE PROVIDED BY OTHERS.

HORIZONTAL
SCALE IN FEET
20 0 20

CALCULATED TWB 2/00
CHECKED MMB 2/00

US 68 AND CHURCH STREET
TRAFFIC SIGNAL PLAN

CHP-36-14.23
PID NO. 20258

33
50

P:\98240002\DWG\signal\9802SG17.DWG.dwg - NOV 18, 1999 - 20:08:09

ADDENDUM #1 DATED 02-25-2000

PHASE DIAGRAM

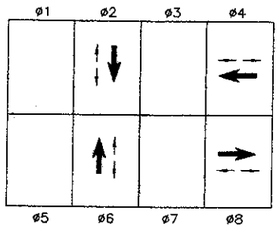

SIGNAL INDICATIONS

H1,H2,H3,H4,
H5,H6,H7,H8

TYPE A2
SYMBOLIC

P1,P2,P3,P4,
P5,P6,P7,P8

ALL INDICATIONS ARE 12"

(R-73A)

MOUNT ABOVE
ALL PUSHBUTTONS

(R-26A)

(W-76AH)

REMOVE EXISTING SPAN MTD. SIGNS
AND RELOCATE TO MAST ARM "3".

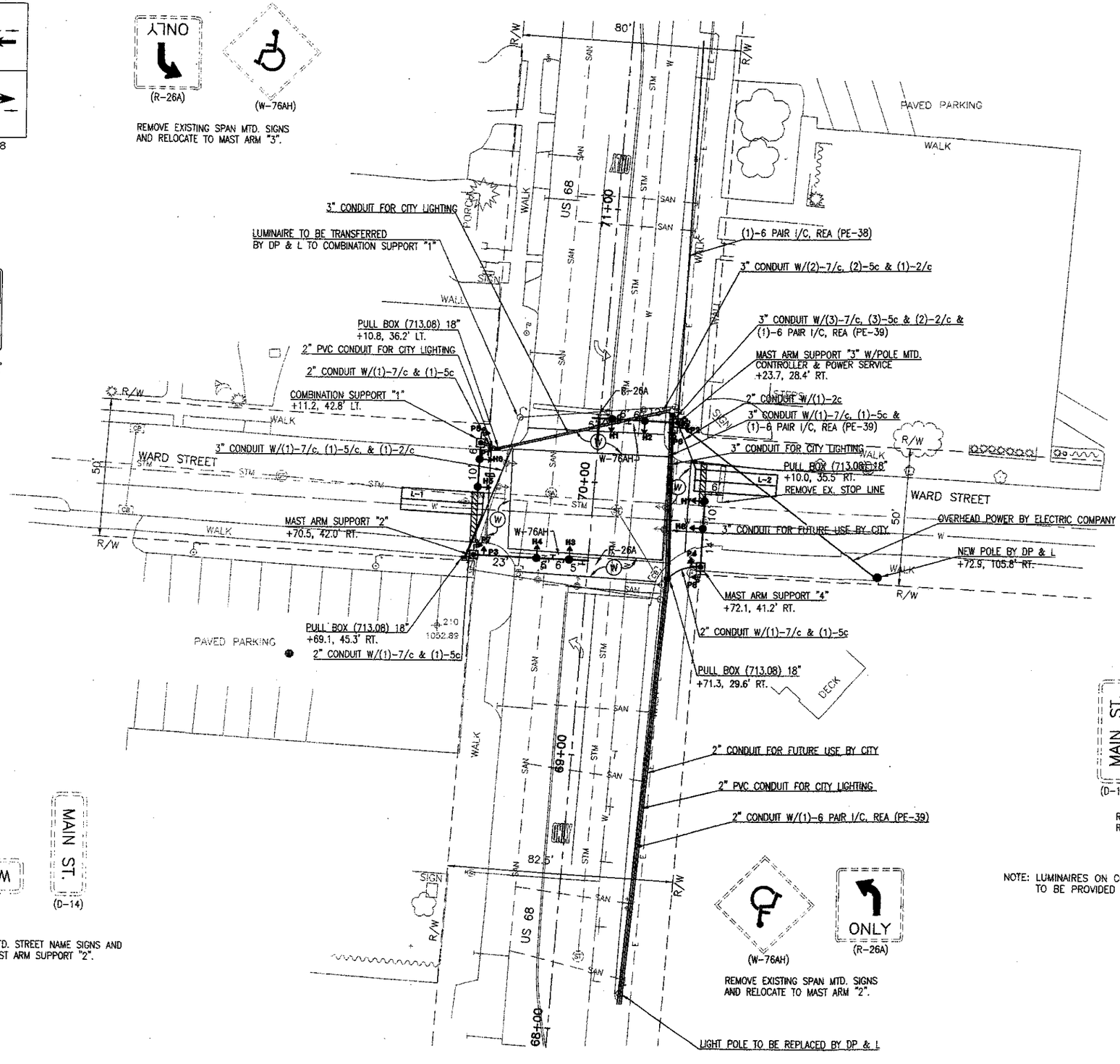

(D-14)

(D-14)

REMOVE POLE MTD. STREET NAME SIGNS AND
RELOCATE TO MAST ARM SUPPORT "2".

(W-76AH)

(R-26A)

REMOVE EXISTING SPAN MTD. SIGNS
AND RELOCATE TO MAST ARM "2".

(D-14)

(D-14)

REMOVE POLE MTD. STREET NAME SIGNS AND
RELOCATE TO MAST ARM SUPPORT "3".

NOTE: LUMINAIRES ON COMBINATION POLES
TO BE PROVIDED BY OTHERS.

HORIZONTAL
SCALE IN FEET
20 0 20

CALCULATED: TWR 2/00
CHECKED: MMM 2/00

US 68 AND WARD STREET
TRAFFIC SIGNAL PLAN

CHP-36-14.23
PID NO. 20258

35
50

P:\98240002\DWG\signal\98025018.DWG - NOV 18, 1999 - 20:08:50

ADDENDUM #1 DATED 02-25-2000

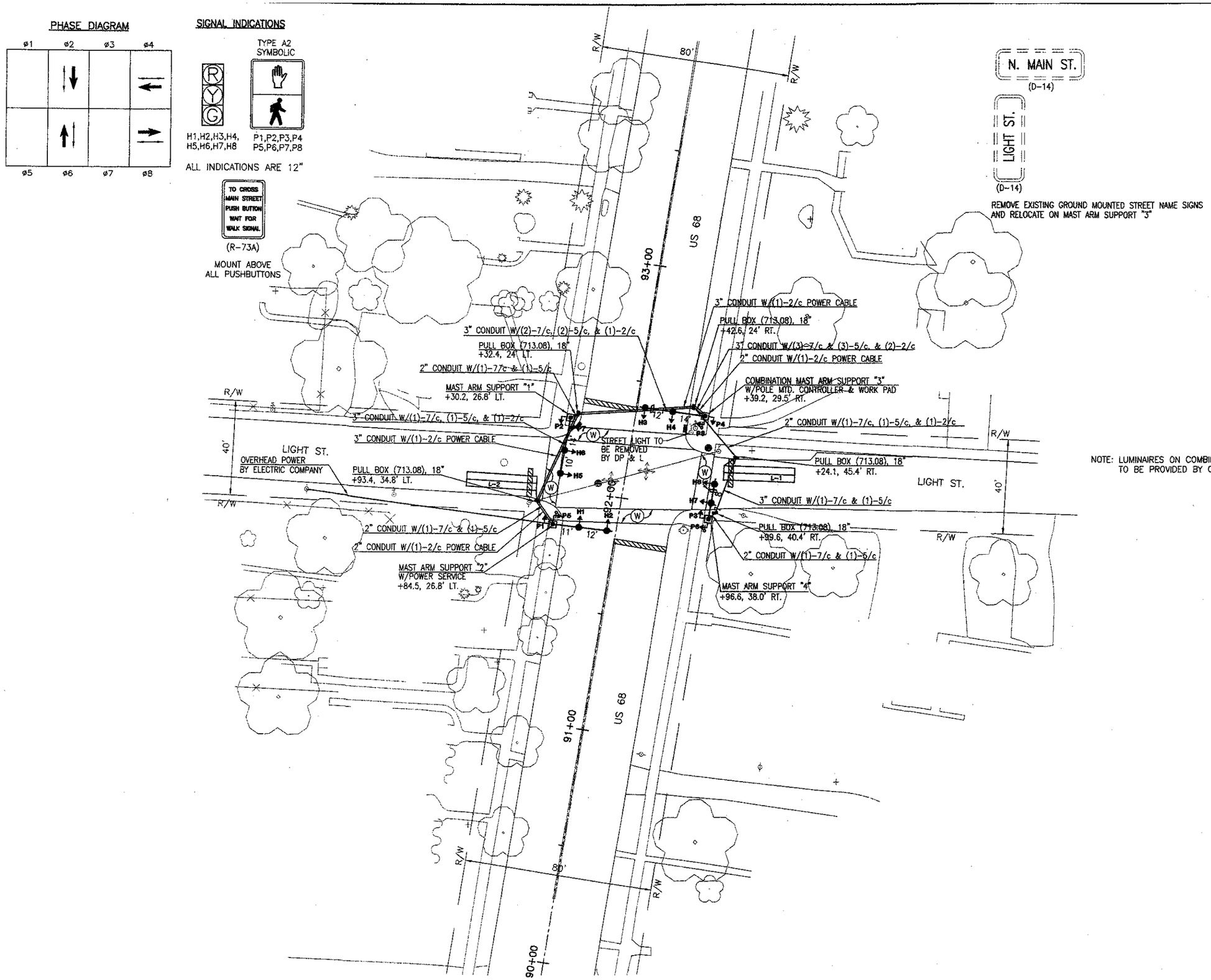

N

HORIZONTAL SCALE IN FEET 20 0 20

CALCULATED: TRR 2/00
CHECKED: MMM 2/00

US 68 AND LIGHT STREET TRAFFIC SIGNAL PLAN

CHP-36-14.23
PID NO. 20258

38a
50

P:\98240002\DWG\signal\9802SG20.DWG.dwg - FEB 18, 2000 - 13:40:33

ADDENDUM #1 DATED 02-25-2000

DETECTOR ASSIGNMENTS

LOOP	SIZE	TURNS	MODE	MEMORY	(E)XTEND/(D)ELAY (SEC.)	UNIT	CHANNEL	PHASE
L-1	6' x 30'	2-4-2	PRESENCE	NON-LOCK	D-5	1	1	4
L-2	6' x 30'	2-4-2	PRESENCE	NON-LOCK	D-5	1	2	8

TIMING

PHASE	ø2	ø4	ø6	ø8
MOVEMENT	SB	WB	NB	EB
MIN. GREEN	20	8	20	8
VEHICLE EXTENSION	–	2.0	–	2.0
MAX 1	35	25	35	25
MAX 2	–	–	–	–
YELLOW	4.0	4.0	4.0	4.0
ALL RED	1.0	1.0	1.0	1.0
WALK	6	6	6	6
PED. CLEAR	8	11	8	11
RECALL	NONE	MAX	NONE	MAX
CALL TO NON-ACTUATED	–	–	–	–

NOTES:
1. ø2, ø4, ø6, & ø8 TO BE PROGRAMMED FOR DUAL ENTRY.

REMOVAL OF TRAFFIC SIGNAL INSTALLATION

DESCRIPTION OF ITEM TO BE REMOVED BY CONTRACTOR	REMOVE AND SALVAGE	REMOVE AND DISPOSE
VEHICULAR SIGNAL HEADS (8)-3 SECTION, 1-WAY	X	
POLE MOUNTED CONTROL CABINET AND CONTROLLER	X	
(1) WOOD POLE	X	
CABLE & WIRE		X
CONTROLLER WORK PAD		X

TRAFFIC CONTROL QUANTITIES

ITEM	EXT.	QTY.	UNITS	DESCRIPTION
625	00500	2	EACH	CONNECTOR KIT, TYPE II
625	18401	1	EACH	BRACKET ARM, 20', AS PER PLAN
625	23400	110	LF	NO 10 AWG POLE AND BRACKET CABLE
625	25400	69	LF	CONDUIT, 2", 713.04
625	25500	210	LF	CONDUIT, 3", 713.04
625	29000	18	LF	TRENCH
625	29501	32	LF	TRENCH IN PAVED AREA, TYPE A, AS PER PLAN
625	29601	103	LF	TRENCH IN PAVED AREA, TYPE B
625	30700	5	EACH	PULL BOX, 713.08, 18"
625	32000	4	EACH	GROUND ROD
630	79500	6	EACH	SIGN SUPPORT ASSEMBLY, POLE MOUNTED
630	85100	2	EACH	REMOVAL OF GROUND MOUNTED SIGN AND REERECTION
632	00300	8	EACH	VEHICULAR SIGNAL HEAD, 3 SECTION, 12" LENS, 1-WAY
632	20101	8	EACH	PEDESTRIAN SIGNAL HEAD, TYPE A2, AS PER PLAN
632	25000	8	EACH	COVERING OF VEHICULAR SIGNAL HEAD
632	26000	4	EACH	PEDESTRIAN PUSH BUTTON
632	26500	2	EACH	DETECTOR LOOP
632	27105	1	EACH	LOOP DETECTOR UNIT, 2 CHANNEL, DELAY & EXTENSION TYPE, AS PER PLAN
632	40500	538	LF	SIGNAL CABLE, 5 CONDUCTOR, NO. 14 AWG
632	40700	370	LF	SIGNAL CABLE, 7 CONDUCTOR, NO. 14 AWG
632	64010	4	EACH	SIGNAL SUPPORT FOUNDATION
632	65200	176	LF	LOOP DETECTOR LEAD-IN CABLE
632	68200	150	LF	POWER CABLE, 2 CONDUCTOR, NO. 6 AWG
632	70001	1	EACH	POWER SERVICE, AS PER PLAN
632	80101	2	EACH	SIGNAL SUPPORT, TYPE TC-81.20, DESIGN 1, AS PER PLAN
632	80201	1	EACH	SIGNAL SUPPORT, TYPE TC-81.20, DESIGN 2, AS PER PLAN
632	81201	1	EACH	COMBINATION SIGNAL SUPPORT, TYPE TC-81.20, DESIGN 2, AS PER PLAN
632	90101	1	EACH	REMOVAL OF TRAFFIC SIGNAL INSTALLATION, AS PER PLAN
633	38001	1	EACH	CONTROLLER, ACTUATED, 8 PHASE, SOLID STATE DIGITAL MICROPROCESSOR, AS PER PLAN
633	70500	8.6	SF	CONTROLLER WORK PLAD
633	99000	1	EACH	CONTROLLER, MISC.: PREEMPTION, AS PER PLAN
642	00602	290	LF	CROSSWALK LINE, TYPE 2
644	00500	70	LF	STOP LINE
633	99000	1	EACH	ALTERNATE BID: CONTROLLER, MISC.: PREEMPTION, AS PER PLAN

SIGNAL DISPLAY SCHEDULE

PHASE / SIGNAL	ø2 & ø6			ø4 & ø8			FLASH	PREEMPTION CALL SB			PREEMPTION CALL WB			PREEMPTION CALL NB			PREEMPTION CALL EB		
	R/W	CLEARANCE		R/W	CLEARANCE			R/W	CLEARANCE		R/W	CLEARANCE		R/W	CLEARANCE		R/W	CLEARANCE	
H1,H2	G	Y	R	R	R	R	Y	R	R	R	R	R	R	G	Y	R	R	R	R
H3,H4	G	Y	R	R	R	R	Y	G	Y	R	R	R	R	R	R	R	R	R	R
H5,H6	R	R	R	G	Y	R	R	R	R	R	G	Y	R	R	R	R	R	R	R
H7,H8	R	R	R	G	Y	R	R	R	R	R	R	R	R	R	R	R	G	Y	R
–	–	–	–	–	–	–	–	–	–	–	–	–	–	–	–	–	–	–	–
–	–	–	–	–	–	–	–	–	–	–	–	–	–	–	–	–	–	–	–

POLE ORIENTATION DATA CHART

SUPPORT NO.	POLE DESIGN NO.	MAST ARM DESIGN NO.	STATION & OFFSET	POLE HEIGHT (ft.)	PED SIGNALS	PED BUTTONS	HANDHOLE	CABLE ENTRANCE	BRACKET ARM	POWER SERVICE	MAST ARM A ANGLE (DEG.)	MAST ARM B ANGLE (DEG.)	L (ft)	L1 (ft)	L2 (ft)	BRACKET ARM LENGTH (ft)	CONTROLLER
MAST ARM 1	2	2	92+30.2, 26.8' LT.	23	0/90	0	180	–	–	–	90	–	25	14	24	–	–
MAST ARM 2	1	1	91+84.5, 26.8' LT.	23	180/270	270	180	–	–	90	0	–	24	11	23	–	–
MAST ARM 3	2	2	92+39.2, 29.5' RT.	30	180/270	270	180	180	0	–	0	–	27	14	26	20	90
MAST ARM 4	1	1	91+96.6, 38.0' RT.	23	180/270	180	180	–	–	–	90	–	16	7	15	–	–

WIRING DIAGRAM

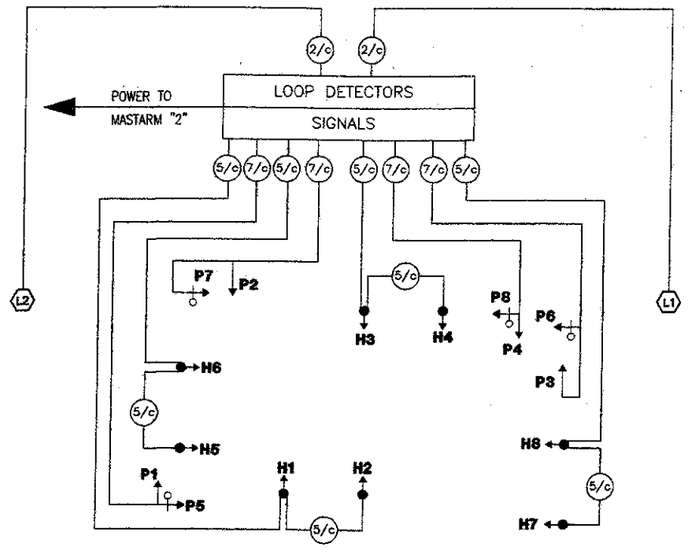

NOTE:
WIRING TO PREEMPTION DETECTORS IS AS SPECIFIED BY MANUFACTURER

US 68 AND LIGHT STREET
TRAFFIC SIGNAL PLAN

CALCULATED: TNN 2/00
CHECKED: MMM 2/00

CHP-36-14.23
PID NO. 20258

38b
50

ADDENDUM #1 DATED 02-25-2000

P:\98240002\DWG\signal\9802TB20.DWG.dwg - FEB 18, 2000 - 20:05:36

PHASE DIAGRAM

SIGNAL INDICATIONS

H1,H2,H3,
H4,H5,H6

TYPE A2
SYMBOLIC

P1,P2,P3,P4

ALL INDICATIONS ARE 12"

(R-73A)

MOUNT ABOVE
ALL PUSHBUTTONS

(R-3L)
REMOVE GROUND MTD. SIGN

(M-2,M-24)
REMOVE POLE MTD. SIGNS AND
RELOCATE TO MASTARM SUPPORT "1"

(R-27A-30)
ERECT ON MAST ARM "1"

(M-50)

(M-2,M-24)
REMOVE GROUND MTD. SIGNS AND
RELOCATE TO MASTARM SUPPORT "2"

NOTE: LUMINAIRES ON COMBINATION POLES
TO BE PROVIDED BY OTHERS.

HORIZONTAL SCALE IN FEET
20 0 20

CALCULATED: TRR 2/00
CHECKED: MMM 2/00

US 36 (MIAMI ST.) AND SR 29 (OAKLAND ST.)
TRAFFIC SIGNAL PLAN

CHP-36-14.23
PID NO. 20258

38c
50

P:\98240002\DWG\signal\9802SG01.DWG - FEB 18, 2000 - 14:44:35

ADDENDUM #1 DATED 02-25-2000

DETECTOR ASSIGNMENTS

LOOP	SIZE	TURNS	MODE	MEMORY	(E)XTEND/ (D)ELAY (SEC.)	UNIT	CHANNEL	PHASE
L1	8' x 30'	2-4-2	PRESENCE	NON-LOCK	D-5	1	1	4

NOTES:
ALL LOOPS ARE QUADROPOLE

TIMING

PHASE	ø2	ø4	ø6
MOVEMENT	WB	SB	EB
MIN. GREEN	20	10	20
VEHICLE EXTENSION	–	2.0	–
MAX 1	30	25	30
MAX 2	–	–	–
YELLOW	4.0	4.0	4.0
ALL RED	1.0	1.0	1.0
WALK	6	6	–
PED. CLEAR	12	10	–
RECALL	MAX	NONE	MAX
CALL TO NON-ACTUATED	1	–	1

NOTES:
1.) ø2 & ø6 TO BE PROGRAMMED FOR DUAL ENTRY.
2.) WALK REST MODIFIER TO BE ENABLED FOR ø2 & ø6.

SIGNAL DISPLAY SCHEDULE

PHASE / SIGNAL	ø2 & ø6				ø4				FLASH	PREEMPTION CALL WB			PREEMPTION CALL SB			PREEMPTION CALL EB		
	R/W	CLEARANCE			R/W	CLEARANCE				R/W	CLEARANCE		R/W	CLEARANCE		R/W	CLEARANCE	
H1,H2	G	G	Y	R	R	R	R	R	Y	G	Y	R	R	R	R	R	R	R
H3,H4	G	G	Y	R	R	R	R	R	Y	R	R	R	R	R	R	G	Y	R
H5,H6	R	R	R	R	G	G	Y	R	R	R	R	R	G	Y	R	R	R	R
P1,P2	W	FDW	DW	DW	DW	DW	DW	DW	OFF	DW	DW	DW	DW	DW	DW	DW	DW	DW
P3,P4	DW	DW	DW	DW	W	FDW	DW	DW	OFF	DW	DW	DW	DW	DW	DW	DW	DW	DW

POLE ORIENTATION DATA CHART

SUPPORT NO.	POLE DESIGN NO.	MAST ARM DESIGN NO.	STATION & OFFSET	POLE HEIGHT (ft.)	PED SIGNALS	PED BUTTONS	HANDHOLE	CABLE ENTRANCE	BRACKET ARM	POWER SERVICE	MAST ARM A ANGLE (DEG.)	MAST ARM B ANGLE (DEG.)	L (ft)	L1 (ft)	L2 (ft)	L3 (ft)	BRACKET ARM LENGTH (ft.)	CONTROLLER
MAST ARM 1	2	2	760+96.4, 26' LT.	30	180	–	180	180	0	270	0	–	26	9	13	25	15	90
MAST ARM 2	1	1	761+38.8, 22.5' RT.	23	–	–	270	–	–	–	270	–	12	3	11	–	–	–
MAST ARM 3	1	1	761+70, 22.5' RT.	23	90	90	180	–	–	–	0	–	24	11	23	–	–	–
PEDESTAL 1	–	–	761+77.5, 32.8' LT.	9	0/90	90	–	–	–	–	–	–	–	–	–	–	–	–

REMOVAL OF TRAFFIC SIGNAL INSTALLATION

DESCRIPTION OF ITEM TO BE REMOVED BY CONTRACTOR	REMOVE AND STORE	REMOVE AND DISPOSE
VEHICULAR SIGNAL HEADS (8)-3 SECTION, 1-WAY	X	
POLE MOUNTED CONTROL CABINET AND CONTROLLER	X	
(1) WOOD POLE	X	
CABLE & WIRE		X
CONTROLLER WORK PAD		X

TRAFFIC CONTROL QUANTITIES

ITEM	EXT.	QTY.	UNITS	DESCRIPTION
608	10000	60	SF	4" CONCRETE WALK
608	50001	1	EACH	CURB RAMP, TYPE 2
625	00500	2	EACH	CONNECTOR KIT, TYPE II
625	18201	1	EACH	BRACKET ARM, 15', AS PER PLAN
625	23400	100	LF	NO. 10 AWG POLE AND BRACKET CABLE
625	25400	56	LF	CONDUIT, 2", 713.04
625	25500	131	LF	CONDUIT, 3", 713.04
625	29000	44	LF	TRENCH
625	29501	14	LF	TRENCH IN PAVED AREA, TYPE A, AS PER PLAN
625	29601	131	LF	TRENCH IN PAVED AREA, TYPE B
625	30700	4	EACH	PULL BOX, 713.08, 18"
625	32000	4	EACH	GROUND ROD
630	79100	1	EACH	SIGN HANGER ASSEMBLY, MAST ARM
630	79500	6	EACH	SIGN SUPPORT ASSEMBLY, POLE MOUNTED
630	80100	7.5	SF	SIGN, FLAT SHEET
630	84900	1	EACH	REMOVAL OF GROUND MOUNTED SIGN AND DISPOSAL
630	85100	4	EACH	REMOVAL OF GROUND MOUNTED SIGN AND REERECTION
632	00300	6	EACH	VEHICULAR SIGNAL HEAD, 3 SECTION, 12" LENS, 1-WAY
632	20101	4	EACH	PEDESTRIAN SIGNAL HEAD, TYPE A2, AS PER PLAN
632	25000	6	EACH	COVERING OF VEHICULAR SIGNAL HEAD
632	26000	2	EACH	PEDESTRIAN PUSH BUTTON
632	26500	1	EACH	DETECTOR LOOP
632	27105	1	EACH	LOOP DETECTOR UNIT, 2 CHANNEL, DELAY AND EXTENSION TYPE, AS PER PLAN
632	40300	15	LF	SIGNAL CABLE, 3 CONDUCTOR, NO. 14 AWG
632	40500	526	LF	SIGNAL CABLE, 5 CONDUCTOR, NO. 14 AWG
632	40700	124	LF	SIGNAL CABLE, 7 CONDUCTOR, NO. 14 AWG
632	64010	3	EACH	SIGNAL SUPPORT FOUNDATION
632	64020	1	EACH	PEDESTAL FOUNDATION
632	85200	26	LF	LOOP DETECTOR LEAD-IN CABLE
632	68200	10	LF	POWER CABLE, 2 CONDUCTOR, NO. 6 AWG
632	70001	1	EACH	POWER SERVICE, AS PER PLAN
632	80101	2	EACH	SIGNAL SUPPORT, TYPE TC-81.20, DESIGN 1, AS PER PLAN
632	81201	1	EACH	COMBINATION SIGNAL SUPPORT, TYPE TC-81.20, DESIGN 2, AS PER PLAN
632	89611	1	EACH	PEDESTAL, 9', AS PER PLAN
632	90101	1	EACH	REMOVAL OF TRAFFIC SIGNAL INSTALLATION, AS PER PLAN
633	38001	1	EACH	CONTROLLER, ACTUATED, 8 PHASE, SOLID STATE DIGITAL MICROPROCESSOR, AS PER PLAN
633	70500	8.6	SF	CONTROLLER WORK PAD
633	99000	1	EACH	CONTROLLER, MISC.: PREEMPTION, AS PER PLAN
642	00302	0.057	MILE	CENTER LINE, TYPE 2
642	00402	60	LF	CHANNELIZING LINE, TYPE 2
644	00500	67	LF	STOP LINE
644	00600	215	LF	CROSSWALK LINE
644	01300	1	EACH	LANE ARROW
644	30000	20	LF	REMOVAL OF PAVEMENT MARKING
633	99000	1	EACH	ALTERNATE BID: CONTROLLER, MISC.: PREEMPTION, AS PER PLAN

WIRING DIAGRAM

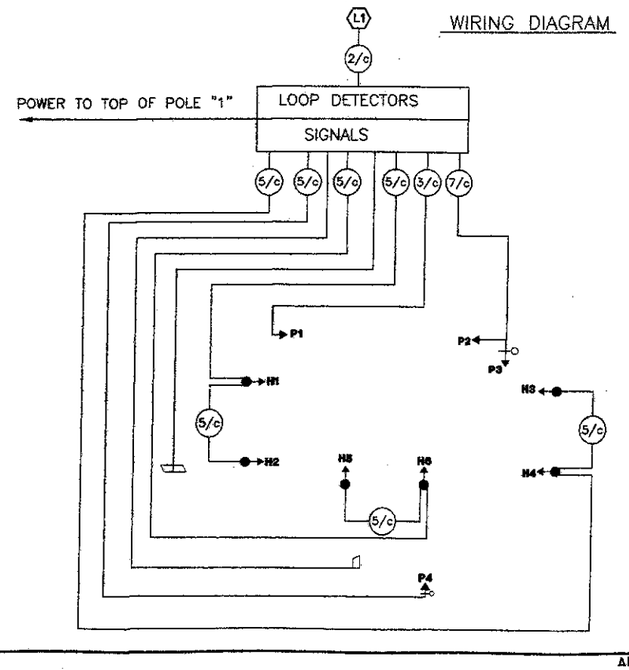

NOTE:
WIRING TO PREEMPTION DETECTORS IS AS SPECIFIED BY MANUFACTURER.

CALCULATED: TSR 2/00
CHECKED: MMM 2/00

US 36 (MIAMI ST.) AND SR 29 (OAKLAND ST.)
TRAFFIC SIGNAL PLAN

CHP-36-14.23
PID NO. 20258

38d
50

ADDENDUM #1 DATED 02-25-2000

P:\98240002\DWG\signal\9802TB01.DWG.dwg -- FEB 18, 2000 -- 15:34:42

PHASE DIAGRAM

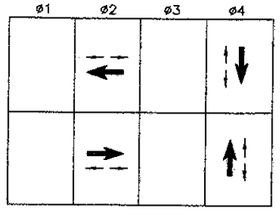

SIGNAL INDICATIONS

H1,H2,H3,H4,
H5,H6,H7,H8

TYPE A2
SYMBOLIC

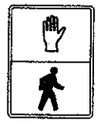

P1,P2,P3,
P4,P5,P6

ALL INDICATIONS ARE 12"

MOUNT R-73(A) ABOVE
ALL PUSHBUTTONS

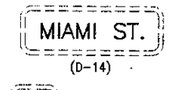

REMOVE EXISTING STREET NAME
SIGNS FROM SIGNAL POLE AND
RELOCATE ON MAST ARM SUPPORT "1"

ERECT R-26A-30 SIGNS
ON MAST ARMS "1B" & "2A"

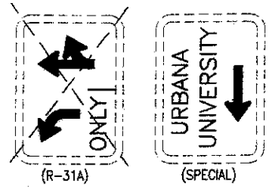

REMOVE GROUND MOUNTED R-31A.

REMOVE GROUND MOUNTED TOURIST ORIENTED
DESTINATION SIGN "URBANA UNIVERSITY" AND
RELOCATE ON THE SAME SUPPORT IN PLACE
OF R-31A.

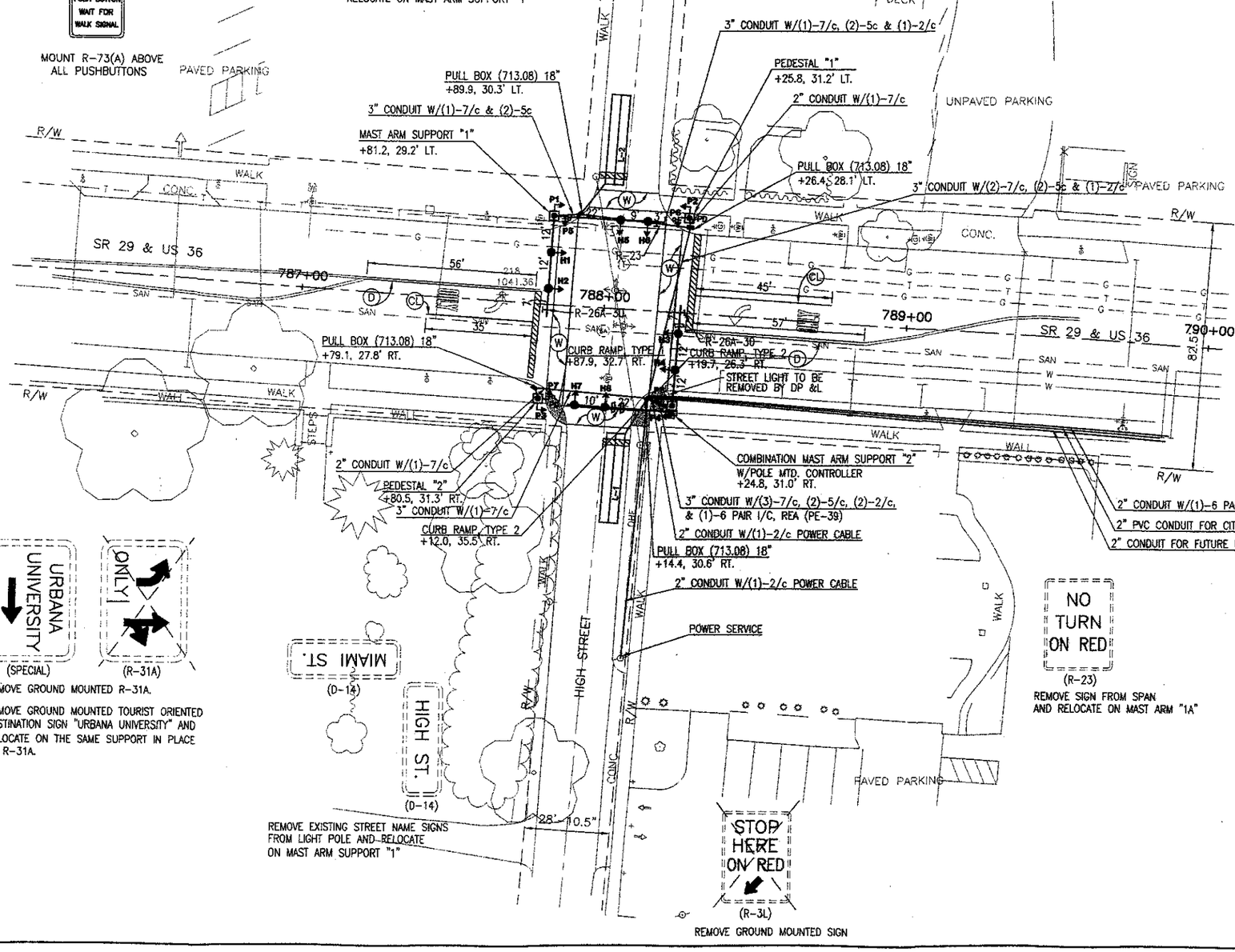

REMOVE GROUND MOUNTED R-31A.

REMOVE GROUND MOUNTED TOURIST ORIENTED
DESTINATION SIGN "URBANA UNIVERSITY" AND
RELOCATE ON THE SAME SUPPORT IN PLACE
OF R-31A.

HORIZONTAL SCALE IN FEET
20 0 20

CALCULATED: TRR 2/00
CHECKED: MBM 2/00

US 36 / SR 29 AND HIGH STREET
TRAFFIC SIGNAL PLAN

CHP-36-14.23
PID NO. 20258

39
50

P:\98240002\DWG\signal\98023G14.DWG.dwg - NOV 18, 1999 - 15:46:51

ADDENDUM #1 DATED 02-25-2000

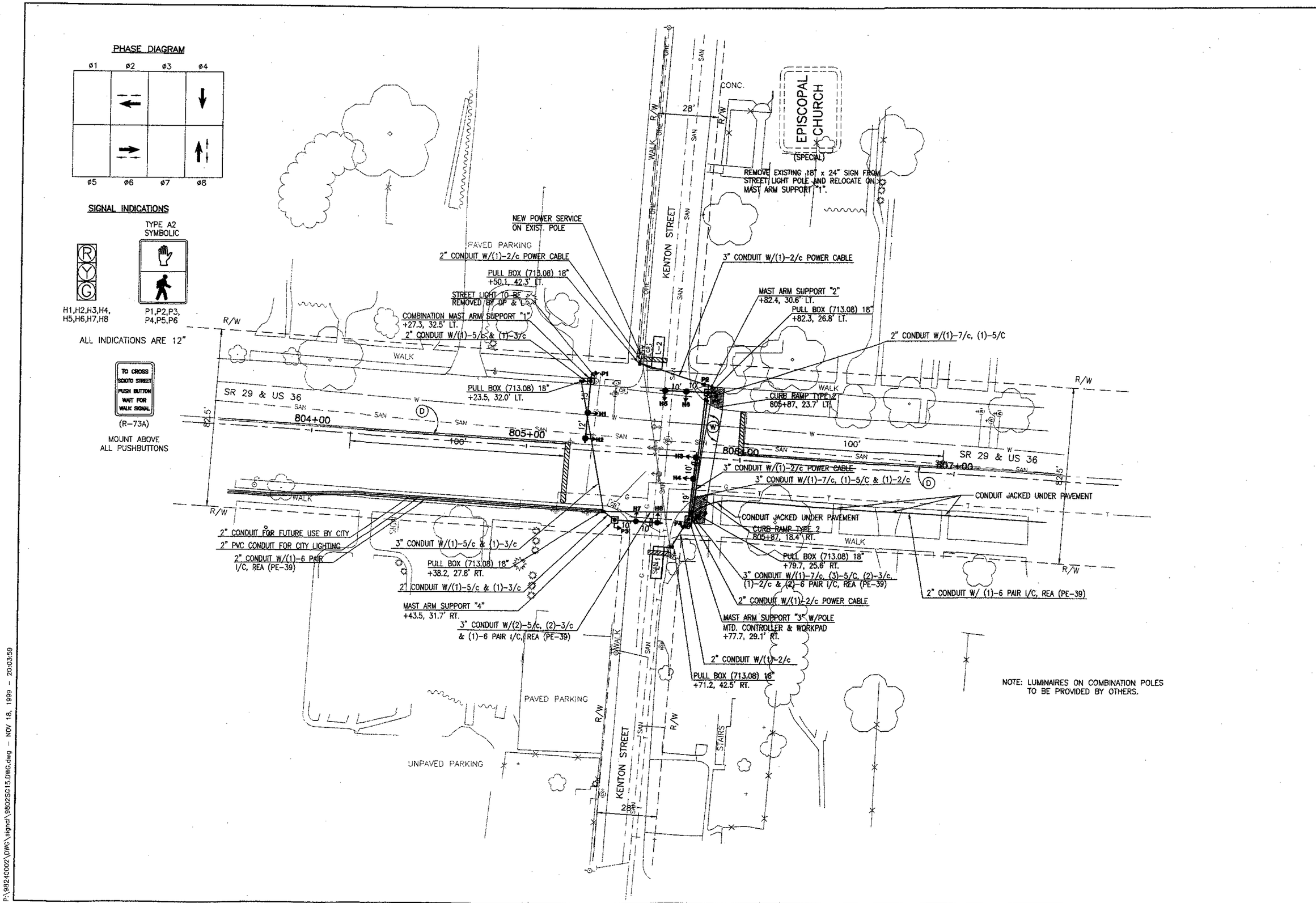

US 36 / SR 29 & KENTON STREET
TRAFFIC SIGNAL PLAN

CHP-36-14.23
PID NO. 20258

ADDENDUM #1 DATED 02-25-2000

P:\98240002\DWG\signal\9802SG15.DWG.dwg - NOV 18, 1999 - 20:03:59

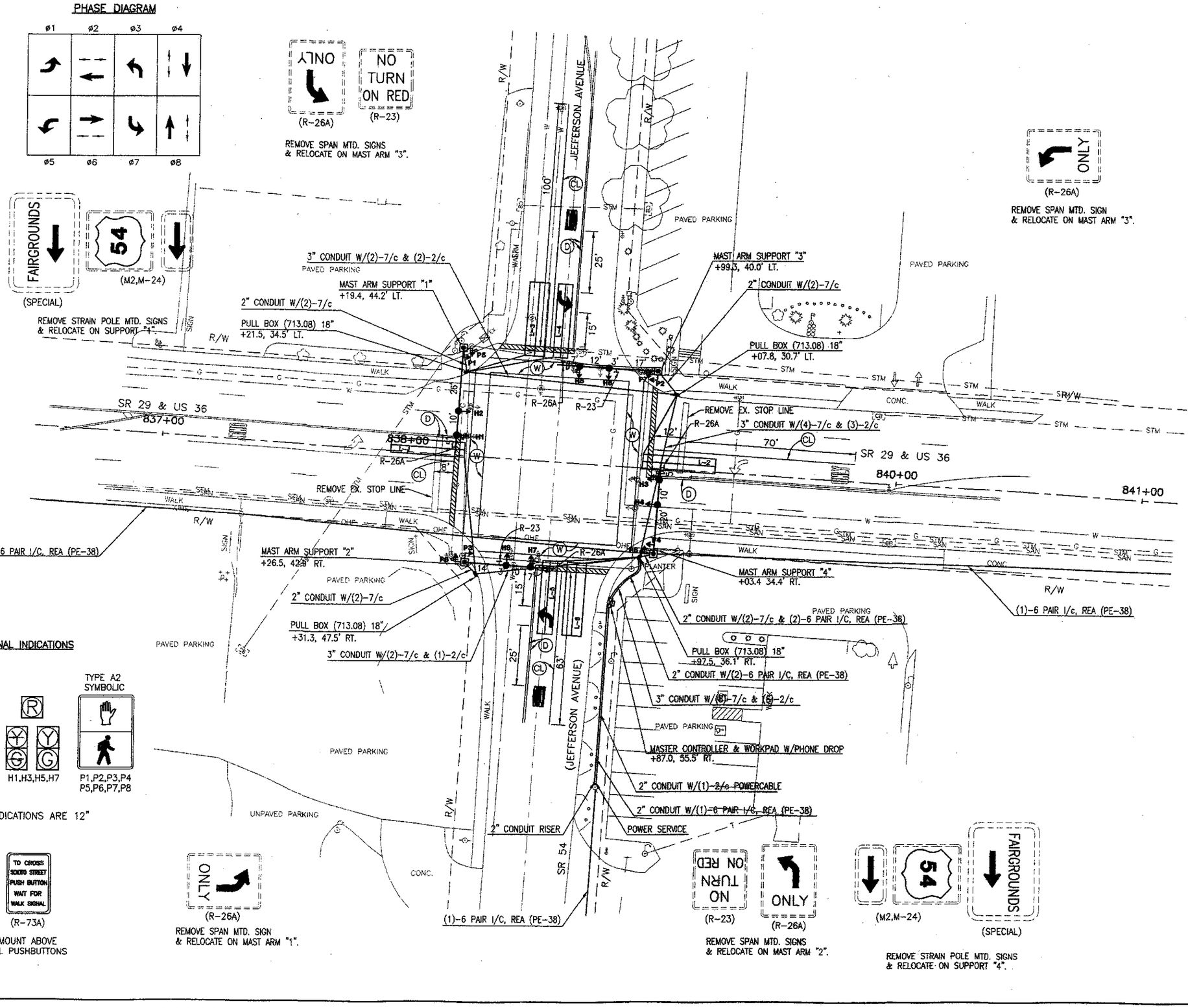

HORIZONTAL SCALE IN FEET
20 0 20

CALCULATED: TRR 2/00
CHECKED: MM 2/00

SR 29 / US 36 AND SR 54 / JEFFERSON AVENUE
TRAFFIC SIGNAL PLAN

CHP-36-14.23
PID NO. 20258

45
50

P:\98240002\DWG\signal\9802SG03.DWG.dwg - FEB 18, 2000 - 19:04:11

ADDENDUM #1 DATED 02-25-2000

PHASE DIAGRAM

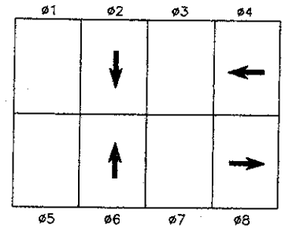

H1,H2,H3,H4,
H5,H6,H7,H8

REMOVE EXISTING R-23 & RP-23 SIGNS FROM SPANS & RELOCATE TO MAST ARMS "1", "2", "3", & "4".

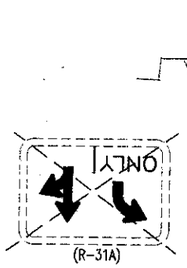

(R-31A)

(R-3L)

REMOVE GROUND MOUNTED SIGNS

ERECT R-26A-30 SIGNS
ON MAST ARMS "1", "2", "3", & "4"

(1) -6 PAIR I/C, REA (PE-38)

(R-3L)

(R-31A)

REMOVE GROUND MOUNTED SIGNS

3" CONDUIT W/(1)-5/c

PULL BOX (713.08) 18"
+62.3, 50.8' LT.

2" CONDUIT W/(1)-5/c

MAST ARM SUPPORT "1"
+61.9, 53.9' LT.

MAST ARM SUPPORT "3"
W/ POLE MTD. CONTROLLER & WORK PAD
+70.6, 24.3' RT.

2" CONDUIT W/(1)-2/c POWER CABLE

3" CONDUIT W/(3)-5/c

PULL BOX (713.08) 18"
+67.4, 22.5' RT.

3" CONDUIT W/(2)-5/c

3" CONDUIT W/(1)-2/c POWER CABLE

2" CONDUIT W/(1)-2/c POWER CABLE

POWER SERVICE

PULL BOX (713.08) 18"
+04.7, 23.7' LT.

2" CONDUIT W/(1)-5/c

MAST ARM SUPPORT "2"
+0.0, 23.7' LT.

MAST ARM SUPPORT "4"
+12.7, 34.4' RT.

2" CONDUIT W/(1)-5/c

PULL BOX (713.08) 18"
+10.6, 30.1 RT.

3" CONDUIT W/(1)-5/c

3" CONDUIT W/(1)-2/c POWER CABLE

R-26A-30

SR54

WATER STREET

44+00

43+00

42+00

41+00

110'

82'

60'

12'

10'

R/W

OHE

SAN

STM

(R-31A)

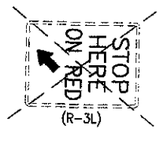

(R-3L)

REMOVE GROUND MOUNTED SIGNS

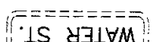

(D-14)

(D-14)

REMOVE EXISTING GROUND MOUNTED
STREET NAME SIGNS AND RELOCATE
ON MAST ARM SUPPORT "2"

(R-3L)

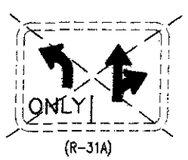

(R-31A)

REMOVE GROUND MOUNTED SIGNS

HORIZONTAL SCALE IN FEET
20 0 20

CALCULATED: TRR 2/00
CHECKED: MMB 2/00

SR 54 AND WATER STREET
TRAFFIC SIGNAL PLAN

CHP-36-14.23
PID NO. 20258

46b
50

ADDENDUM #1 DATED 02-25-2000

P:\98240002\DWG\signal\98025G04.DWG.dwg - FEB 18, 2000 - 10:40:59

REMOVAL OF TRAFFIC SIGNAL INSTALLATION

DESCRIPTION OF ITEM TO BE REMOVED BY CONTRACTOR	REMOVE AND SALVAGE	REMOVE AND DISPOSE
VEHICULAR SIGNAL HEADS (8)–3 SECTION, 1–WAY	X	
POLE MOUNTED CONTROL CABINET AND CONTROLLER	X	
(1) WOOD POLE	X	
CABLE & WIRE		X
CONTROLLER WORK PAD		X

TRAFFIC CONTROL QUANTITIES

ITEM	EXT.	QTY.	UNITS	DESCRIPTION
625	25490	23	LF	CONDUIT, 2", 713.04
625	25500	303	LF	CONDUIT, 3", 713.04
625	29000	65	LF	TRENCH
625	29601	129	LF	TRENCH IN PAVED AREA, TYPE B
625	30700	4	EACH	PULL BOX, 713.08, 18"
625	32000	4	EACH	GROUND ROD
630	79100	4	EACH	SIGN HANGER ASSEMBLY, MAST ARM
630	79500	2	EACH	SIGN SUPPORT ASSEMBLY, POLE MOUNTED
630	80100	30	SF	SIGN, FLAT SHEET
630	84900	8	EACH	REMOVAL OF GROUND MOUNTED SIGN AND DISPOSAL
630	85100	2	EACH	REMOVAL OF GROUND MOUNTED SIGN AND REERECTION
632	00300	8	EACH	VEHICULAR SIGNAL HEAD, 3 SECTION, 12" LENS, 1–WAY
632	25000	8	EACH	COVERING OF VEHICULAR SIGNAL HEAD
632	40500	586	LF	SIGNAL CABLE, 5 CONDUCTOR, NO. 14 AWG
632	62803	150	LF	INTERCONNECT CABLE, INTEGRAL MESSENGER WIRE TYPE, 6 PAIR, NO. 19 AWG, SOLID, REA (PE–38), AS PER PLAN
632	64010	4	EACH	SIGNAL SUPPORT FOUNDATION
632	68200	157	LF	POWER CABLE, 2 CONDUCTOR, NO. 6 AWG
632	70001	1	EACH	POWER SERVICE, AS PER PLAN
632	80101	1	EACH	SIGNAL SUPPORT, TYPE TC–81.20, DESIGN 1, AS PER PLAN
632	80201	3	EACH	SIGNAL SUPPORT, TYPE TC–81.20, DESIGN 2, AS PER PLAN
632	90101	1	EACH	REMOVAL OF TRAFFIC SIGNAL INSTALLATION, AS PER PLAN
633	38001	1	EACH	CONTROLLER, ACTUATED, 8 PHASE, SOLID STATE DIGITAL MICROPROCESSOR, AS PER PLAN
633	70500	8.6	SF	CONTROLLER WORK PAD
633	99000	1	EACH	CONTROLLER, MISC.: PREEMPTION, AS PER PLAN
642	00302	0.059	MILE	CENTER LINE, TYPE 2
642	00402	312	LF	CHANNELIZING LINE, TYPE 2
644	00500	82	LF	STOP LINE
644	01300	4	EACH	LANE ARROW
633	99000	1	EACH	ALTERNATE BID: CONTROLLER, MISC.: PREEMPTION, AS PER PLAN

TIMING

PHASE	ø2	ø4	ø6	ø8
MOVEMENT	SB	WB	NB	EB
MIN. GREEN	20	10	20	10
VEHICLE EXTENSION	–	–	–	–
MAX 1	48	30	48	30
MAX 2	–	–	–	–
YELLOW	3.5	3.5	3.5	3.5
ALL RED	1.0	1.0	1.0	1.0
WALK	–	–	–	–
PED. CLEAR	–	–	–	–
RECALL	MAX	MAX	MAX	MAX
CALL TO NON–ACTUATED	1	–	1	–

COORDINATION TIMING (SECONDS)

CYCLE/OFFSET	PHASE ø2	ø4	ø6	ø8	DESCRIPTION
70/7	42	28	42	28	12AM–6AM, 7 DAYS
75/55	45	30	45	30	6AM–10:30AM, M–F
75/38	45	30	45	30	10:30AM–7PM, M–F
70/66	48	22	48	22	7PM–12AM M–F 6AM–12AM, SA & SU

NOTES:
1. OFFSETS REFERENCED TO BEGINNING OF ø2 & ø6
2. ø2, ø4, ø6, & ø8 TO BE PROGRAMMED FOR DUAL ENTRY.

SIGNAL DISPLAY SCHEDULE

PHASE / SIGNAL	ø2 & ø6 R/W	ø2 & ø6 CLEARANCE		ø4 & ø8 R/W	ø4 & ø8 CLEARANCE		FLASH	PREEMPTION CALL SB R/W	PREEMPTION CALL SB CLEARANCE		PREEMPTION CALL WB R/W	PREEMPTION CALL WB CLEARANCE		PREEMPTION CALL NB R/W	PREEMPTION CALL NB CLEARANCE		PREEMPTION CALL EB R/W	PREEMPTION CALL EB CLEARANCE	
H1,H2	G	Y	R	R	R	R	R	R	Y	R	R	R	R	G	Y	R	R	R	R
H3,H4	G	Y	R	R	R	R	R	G	Y	R	R	R	R	R	R	R	R	R	R
H5,H6	R	R	R	G	Y	R	R	R	R	R	G	Y	R	R	R	R	R	R	R
H7,H8	R	R	R	G	Y	R	R	R	R	R	R	R	R	R	R	R	G	Y	R
–	–	–	–	–	–	–	–	–	–	–	–	–	–	–	–	–	–	–	–
–	–	–	–	–	–	–	–	–	–	–	–	–	–	–	–	–	–	–	–

POLE ORIENTATION DATA CHART

SUPPORT NO.	POLE DESIGN NO.	MAST ARM DESIGN NO.	STATION & OFFSET	POLE HEIGHT (ft.)	PED SIGNALS	PED BUTTONS	HANDHOLE	CABLE ENTRANCE	POWER SERVICE	MAST ARM A ANGLE (DEG.)	MAST ARM B ANGLE (DEG.)	L (ft)	L1 (ft)	L2 (ft)	L3 (ft)	CONTROLLER
MAST ARM 1	2	2	42+61.9, 53.9' LT.	23	–	–	180	–	–	90	–	27	12	22	26	–
MAST ARM 2	1	1	42+00, 23.7' LT.	23	–	–	180	–	–	0	–	24	8	18	23	–
MAST ARM 3	2	2	42+70.6, 24.3' RT.	23	–	–	180	–	–	0	–	26	11	21	25	90
MAST ARM 4	2	2	42+12.7, 34.4' RT.	23	–	–	90	–	–	90	–	27	12	22	26	–

WIRING DIAGRAM

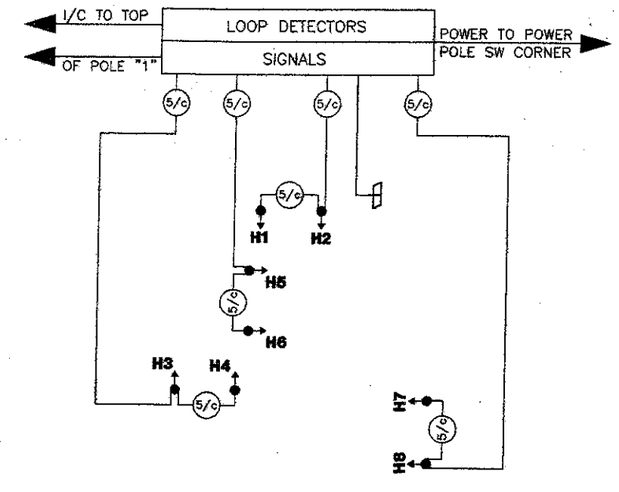

NOTE:
WIRING TO PREEMPTION DETECTORS IS AS SPECIFIED BY MANUFACTURER

DESIGNED TIM 2/00
DRAWN BMS 2/00
CHECKED
QUANTITIES

SR 54 AND WATER STREET
TRAFFIC SIGNAL PLAN

CHP-36-14.23
PID NO. 20258

46c
50

P:\98240002\DWG\signal\9802TB04.DWG – FEB 18, 2000 – 10:42:01

ADDENDUM #1 DATED 02–25–2000

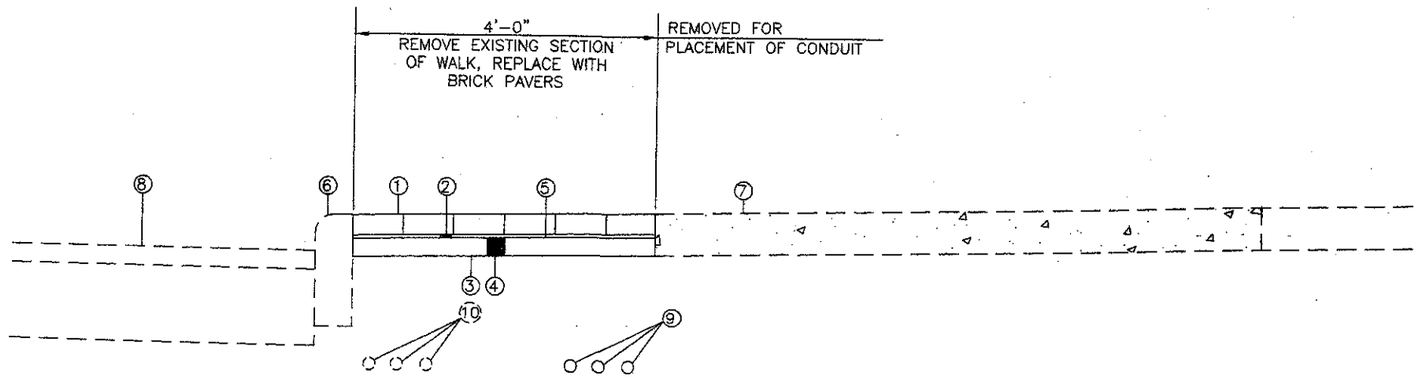

PAVER DETAIL AT CURB

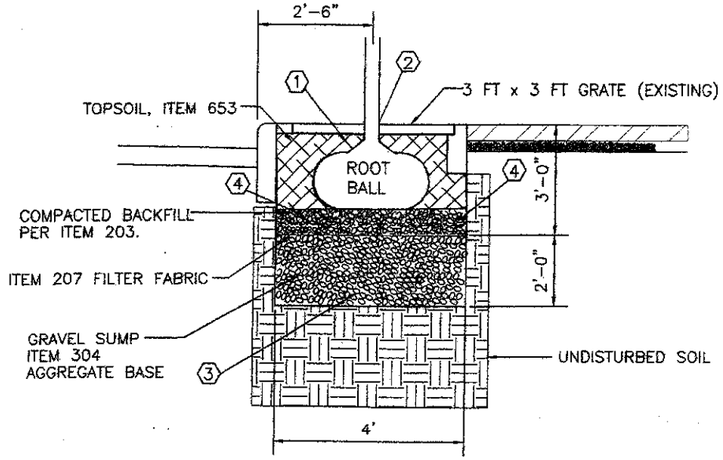

PLANTING DETAIL

① REMOVE BURLAP FROM TOP 1/3 OF ROOT BALL & BACKFILL AROUND BALL W/ TOPSOIL MIXTURE.

② TREE SHALL BEAR THE SAME RELATION TO FINISH GRADE AS IT BORE TO PREVIOUS GRADE.

③ BREAK UP SIDE WALLS OF TREE PIT PRIOR TO PLANTING OPERATIONS.

④ CARE SHALL BE EXERCISED TO SHIFT OR PROTECT PROPOSED AND EXISTING CONDUIT DURING PLANTING.

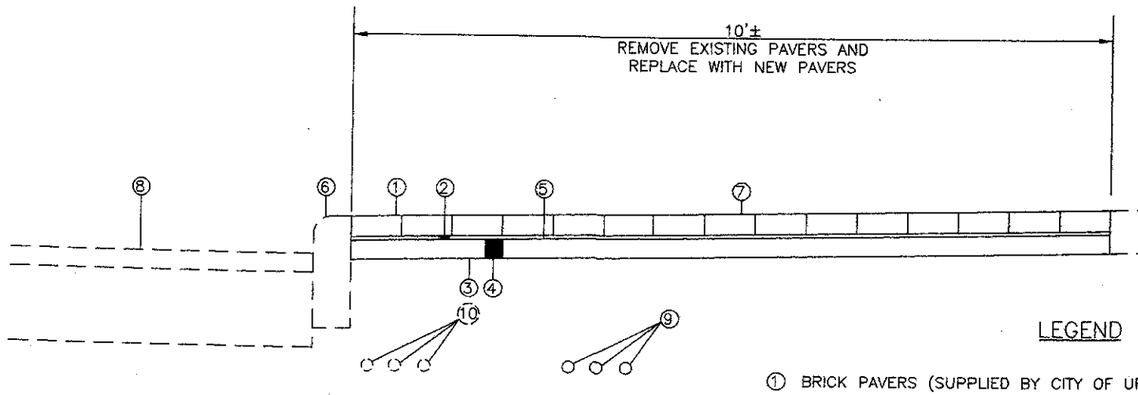

PAVER REPLACEMENT SECTION

LEGEND

① BRICK PAVERS (SUPPLIED BY CITY OF URBANA)
② 1" SAND LEVELING LAYER
③ SUBGRADE COMPACTION, ITEM 203
④ 6" AGGREGATE BASE, ITEM 411
⑤ GEOTEXTILE FABRIC
⑥ EXISTING CURB
⑦ EXISTING WALK
⑧ EXISTING PAVEMENT
⑨ PROPOSED SIGNAL/LIGHTING CONDUIT 24" BELOW SURFACE.
⑩ EXISTING SIGNAL/LIGHTING CONDUIT LOCATION APPROXIMATELY AS SHOWN.

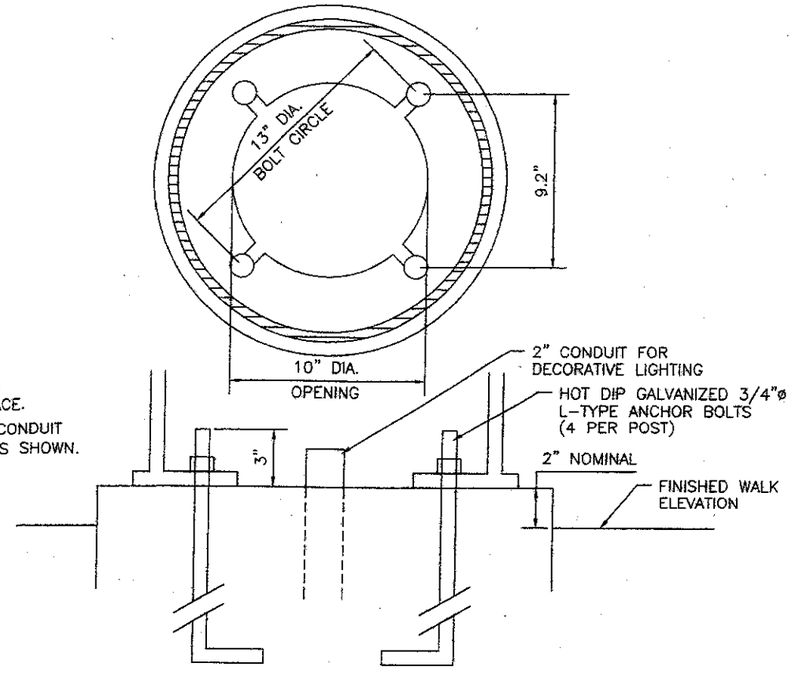

ANCHORAGE GUIDE FOR LIGHTING POST

DEMOLITION AND STREETSCAPE PLAN
MISCELLANEOUS DETAILS

CHP-36-14.23
PID NO. 20258

49b
50

ADDENDUM #1 DATED 02-25-2000

P:\98246002\98022P00.DWG dwg - FEB 14, 2000 - 18:45:50

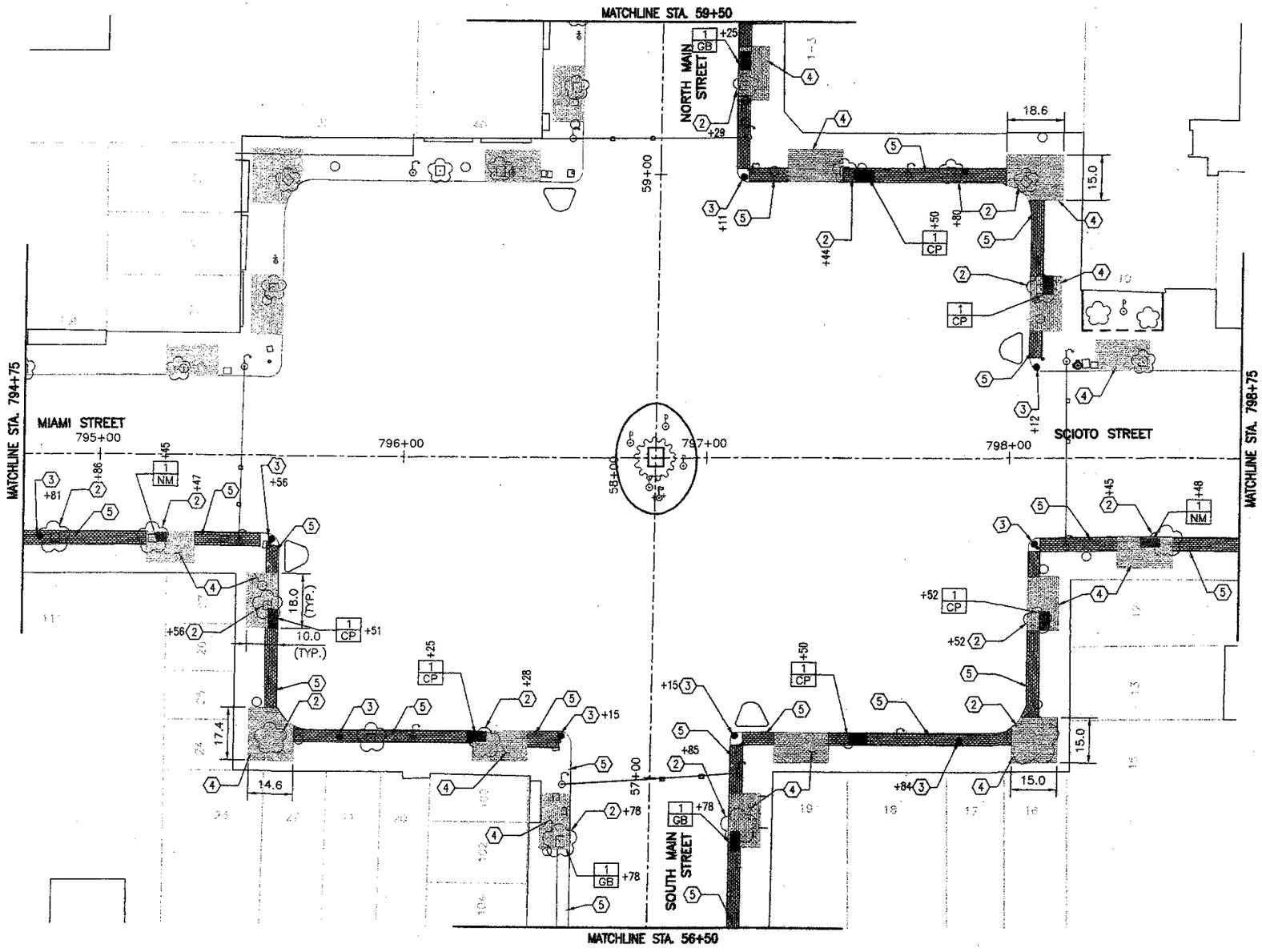

CODED NOTES

1. REMOVE EXISTING TREE.
2. REMOVE EXISTING TREE: REMOVE GRATE FOR REUSE.
3. 24" CONCRETE FOUNDATION PER STD. DWG. HL-20.11M, AS PER PLAN
4. REMOVE EXISTING BRICK PAVERS AND TURN OVER TO CITY FOR PAVER REPAIR WORK, REPLACE WITH PAVERS SUPPLIED BY THE CITY OF URBANA.
5. INSTALL 4'-0" WIDE BRICK STRIP WITH PAVERS SUPPLIED BY THE CITY OF URBANA.
6. REMOVE EXISTING GRATE FOR REUSE.

TREE SCHEDULE

SYMBOL	QUANTITY	TYPE	SIZE
CP	6	CULTIVAR PEAR	≥ 2"
NM	6	NORWEGIAN MAPLE	≥ 2"
GB	25	GINKO BILOBA	≥ 2"

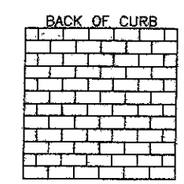

BRICK PATERN

NORIZONTAL SCALE IN FEET

CALCULATED: TRR 2/00
CHECKED: MMB 2/00

DEMOLITION AND STREETSCAPE PLAN
MONUMENT SQUARE

CHP-36-14.23
PID NO. 20258

ADDENDUM #1 DATED 02-25-2000

P:\98240002\9802PP01.DWG.dwg - FEB 14, 2000 - 18:45:50

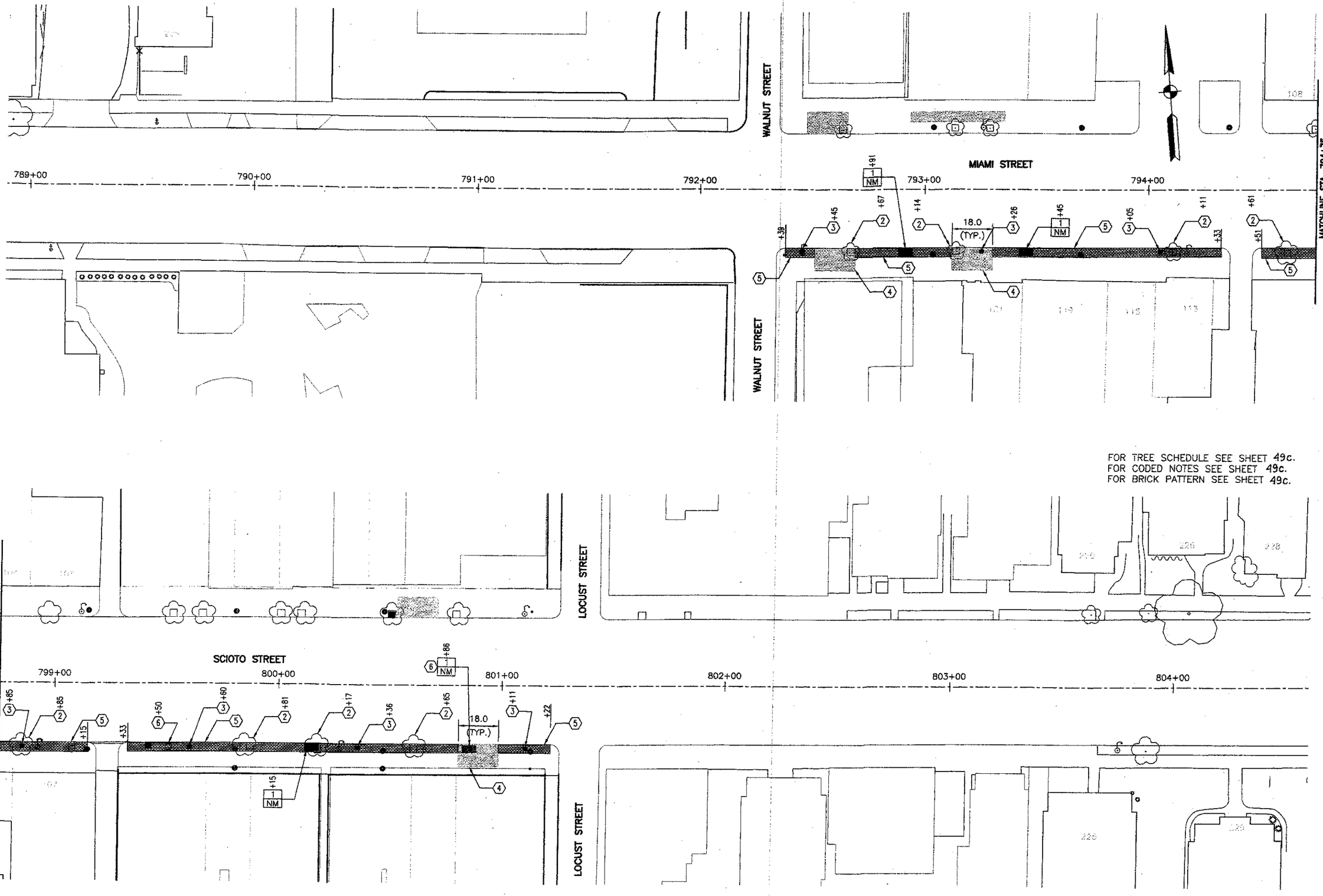

FOR TREE SCHEDULE SEE SHEET 49c.
FOR CODED NOTES SEE SHEET 49c.
FOR BRICK PATTERN SEE SHEET 49c.

HORIZONTAL SCALE IN FEET

CALCULATED: TRR 2/00
CHECKED: MMM 2/00

DEMOLITION AND STREETSCAPE PLAN
MIAMI AND SCIOTO STREET

CHP-36-14.23
PID NO. 20258

ADDENDUM #1 DATED 02-25-2000

P:\98240002\9802PP02.DWG.dwg - FEB 14, 2000 - 18:15:50

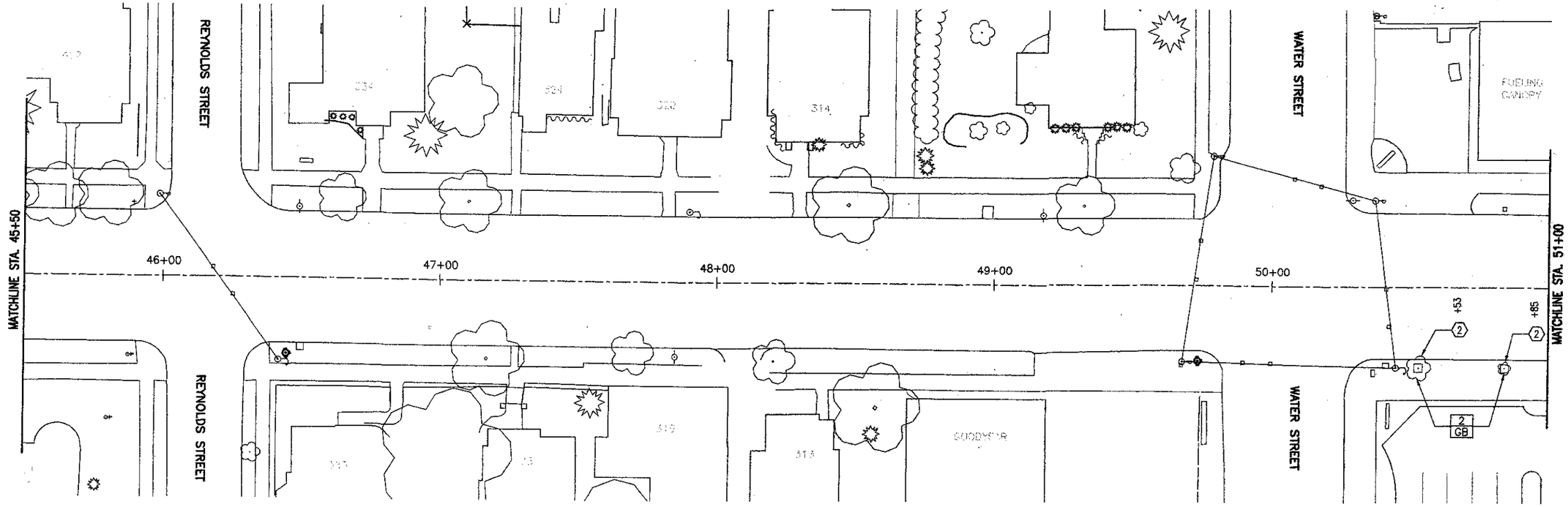

FOR TREE SCHEDULE SEE SHEET 49c.
FOR CODED NOTES SEE SHEET 49c.
FOR BRICK PATTERN SEE SHEET 49c.

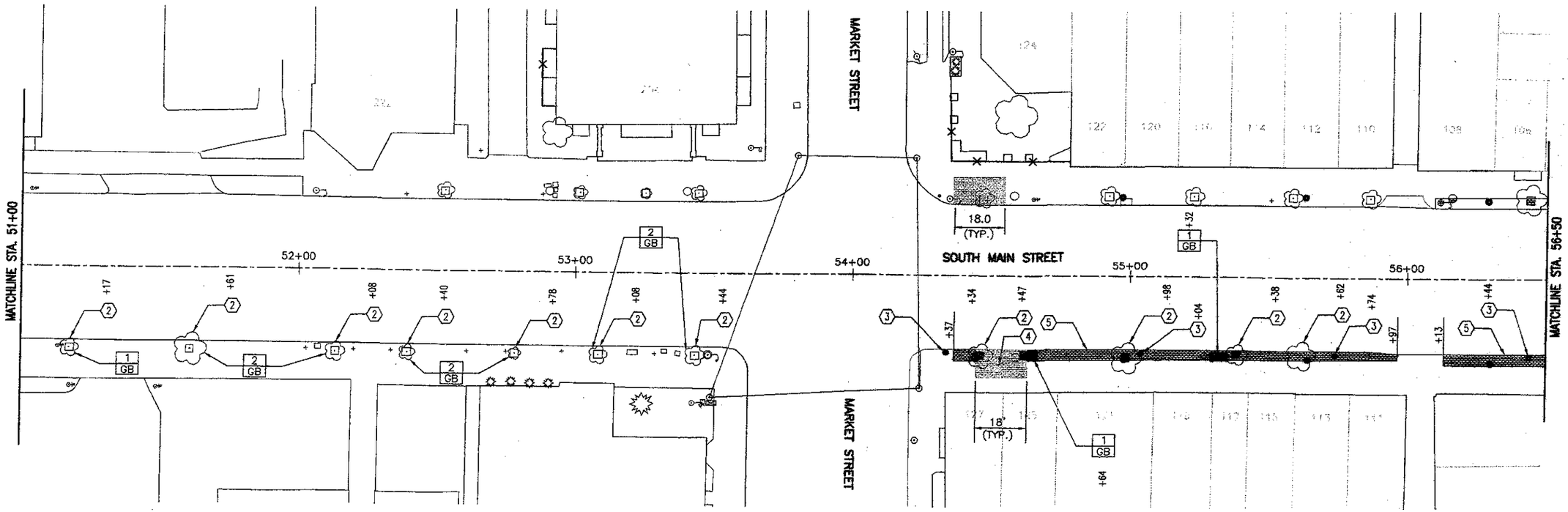

DESIGNED: TEB 2/00
CHECKED: MBM 2/00
HORIZONTAL SCALE IN FEET
20 0 20

DEMOLITION AND STREETSCAPE PLAN
SOUTH MAIN STREET

CHP-36-14.23
PID NO. 20258

49e
50

P:\98240002\9802PP03.DWG.dwg - FEB 14, 2000 - 18:46:50

ADDENDUM #1 DATED 02-25-2000

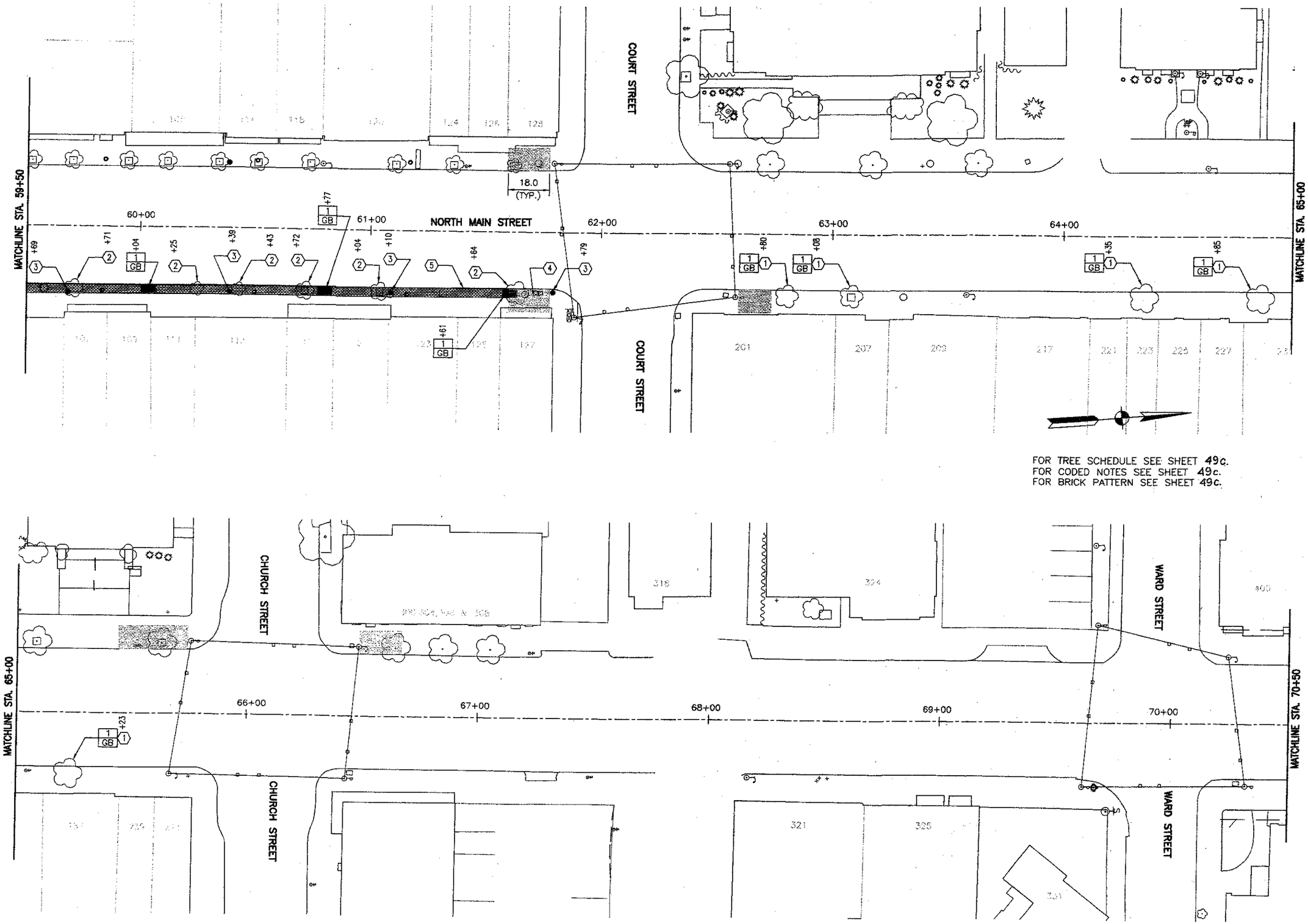

FOR TREE SCHEDULE SEE SHEET 49c.
FOR CODED NOTES SEE SHEET 49c.
FOR BRICK PATTERN SEE SHEET 49c.

HORIZONTAL SCALE IN FEET
20 0 20

CALCULATED TSR 2/00
CHECKED MMM 2/00

DEMOLITION AND STREETSCAPE PLAN NORTH MAIN STREET

CHP-36-14.23
PID NO. 20258

49f
50

P:\98240002\9802PP04.DWG.dwg — FEB 14, 2000 — 18:45:50

ADDENDUM #1 DATED 02-25-2000

FOR TREE SCHEDULE SEE SHEET 49c.
FOR CODED NOTES SEE SHEET 49c.
FOR BRICK PATTERN SEE SHEET 49c.

HORIZONTAL SCALE IN FEET
20 0 20

CALCULATED TRB 2/00
CHECKED MBM 2/00

DEMOLITION AND STREETSCAPE PLAN NORTH MAIN STREET

CHP-36-14.23
PID NO. 20258

50
50

P:\98240002\9892PP05.DWG.dwg - FEB 14, 2000 - 18:45:50

ADDENDUM #1 DATED 03-25-2000